Air Cylinder: Standard
Double Acting with End of Stroke Cushioning
Series CP96
ø32, ø40, ø50, ø63, ø80, ø100, ø125

The CP96 series (standard type, ø32 to ø100) has been remodeled. When selecting a product, please consider using the new **CP96 series**.

How to order

CP96S B 32 – 100 J W – [ ]

With auto switch **CP96SD** B 32 – 100 J W – M9BW S – [ ]

With auto switch
(Built-in magnet)

Mounting

B	Basic
L	Axial foot
F	Rod flange
G	Head flange
C	Single clevis
D	Double clevis

∗ Mounting brackets are shipped together, (but not assembled).

Bore size

32	32 mm
40	40 mm
50	50 mm
63	63 mm
80	80 mm
100	100 mm
125	125 mm

Cylinder stroke (mm)
Refer to "Standard Strokes" on page 44.

Rod boot

Nil	Without rod boot
J	Nylon tarpaulin (one side)
JJ	Nylon tarpaulin (both sides)
K	Heat resistant tarpaulin (one side)
KK	Heat resistant tarpaulin (both sides)

Rod

Nil	Single rod
W	Double rod

Auto switch

Nil	Without auto switch

∗ For applicable auto switches, refer to the table below.

Number of auto switches

Nil	2 pcs.
S	1 pc.
3	3 pcs.
n	"n" pcs.

Made to Order
Refer to page 44 for details.

Applicable Auto Switches/Refer to the Best Pneumatics No. 2 for further information on auto switches.

Type	Special function	Electrical entry	Indicator light	Wiring (Output)	Load voltage DC		Load voltage AC	Auto switch model	Lead wire length (m) 0.5 (Nil)	1 (M)	3 (L)	5 (Z)	Pre-wired connector	Applicable load	
Solid state auto switch	—	Grommet	Yes	3-wire (NPN)	24 V	5 V, 12 V	—	M9N	●	●	●	○	○	IC	Relay, PLC
				3-wire (PNP)				M9P	●	●	●	○	○		
				2-wire		12 V		M9B	●	●	●	○	○	—	
	Diagnostic indication (2-color indication)	Grommet		3-wire (NPN)		5 V, 12 V		M9NW	●	●	●	○	○	IC	
				3-wire (PNP)				M9PW	●	●	●	○	○		
				2-wire		12 V		M9BW	●	●	●	○	○	—	
	Water resistant (2-color indication)			3-wire (NPN)		5 V, 12 V		M9NA*1	○	○	●	○	○	IC	
				3-wire (PNP)				M9PA*1	○	○	●	○	○		
				2-wire		12 V		M9BA*1	○	○	●	○	○	—	
Reed auto switch	—	Grommet	Yes	3-wire (NPN equivalent)	—	5 V	—	A96	●	—	●	—	—	IC	—
				2-wire	24 V	12 V	100 V	A93	●	●	●	●	—	—	Relay, PLC
			No				100 V or less	A90	●	—	●	—	—	IC	

∗1 Water resistant type auto switches can be mounted on the above models, but in such case SMC cannot guarantee water resistance.

∗ Lead wire length symbols: 0.5 m ····· Nil (Example) M9NW
1 m ····· M (Example) M9NWM
3 m ····· L (Example) M9NWL
5 m ····· Z (Example) M9NWZ

∗ Solid state switches marked with "○" are produced upon receipt of order.

∗ Since there are other applicable auto switches than listed above, refer to the Best Pneumatics No. 2 for details.
∗ For details about auto switches with pre-wired connector, refer to the Best Pneumatics No. 2.
∗ The D-A9□/M9□/M9□W/M9□A auto switches are shipped together, (but not assembled).
(However, only the auto switch mounting brackets are assembled before shipment.)
Note) D-Y59A, Y69A, Y7P, Y7□W, Z7□, Z80 type cannot be mounted on the CP96 series.
Moreover, the D-M9□□ and A9□ auto switches cannot be mounted on square groove of the CP96 series.

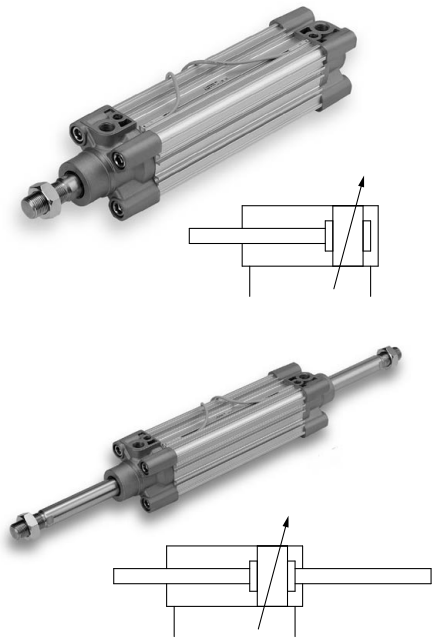

Minimum Stroke for Auto Switch Mounting

Refer to "Minimum Stroke for Auto Switch Mounting" on page 54.

Made to Order

(For details, refer to pages 84 to 91.)

Symbol	Specifications
-XA□	Change of rod end shape
-XB6	Heat resistant cylinder (150°C)
-XC4	With heavy duty scraper
-XC7	Tie-rod, cushion valve, tie-rod nut, etc. made of stainless steel
-XC10	Dual stroke cylinder/Double rod type
-XC11	Dual stroke cylinder/Single rod type
-XC22	Fluororubber seal
-XC35	With coil scraper
-XC68	Made of stainless steel (with hard chrome plated piston rod)

⚠ Caution

Be sure to read before handling.

Refer to page 105 for Safety Instructions and "Handling Precautions for SMC Products" (M-E03-3) for Actuator and Auto Switch Precautions.

Specifications

Bore size (mm)	32	40	50	63	80	100	125
Action	Double acting						
Fluid	Air						
Proof pressure	1.5 MPa						
Max. operating pressure	1.0 MPa						
Min. operating pressure	0.05 MPa						
Ambient and fluid temperature	Without auto switch: –20 to 70°C (No freezing) With auto switch : –10 to 60°C (No freezing)						
Lubrication	Not required (Non-lube)						
Operating piston speed	50 to 1000 mm/s						50 to 700 mm/s
Allowable stroke tolerance	Up to 250 st: $^{+1.0}_{0}$, 251 to 1000 st: $^{+1.4}_{0}$, 1001 to 1500 st: $^{+1.8}_{0}$, 1501 to 2000 st: $^{+2.2}_{0}$						
Cushion	Air cushion						
Port size	G 1/8	G 1/4	G 1/4	G 3/8	G 3/8	G 1/2	G 1/2
Mounting	Basic, Axial foot, Rod flange, Head flange, Single clevis, Double clevis, Center trunnion						

Standard Strokes

Bore size (mm)	Standard stroke (mm)	Max. stroke Note)
32	25, 50, 80, 100, 125, 160, 200, 250, 320, 400, 500	2000
40	25, 50, 80, 100, 125, 160, 200, 250, 320, 400, 500	2000
50	25, 50, 80, 100, 125, 160, 200, 250, 320, 400, 500, 600	2000
63	25, 50, 80, 100, 125, 160, 200, 250, 320, 400, 500, 600	2000
80	25, 50, 80, 100, 125, 160, 200, 250, 320, 400, 500, 600, 700, 800	2000
100	25, 50, 80, 100, 125, 160, 200, 250, 320, 400, 500, 600, 700, 800	2000
125	—	2000

Intermediate strokes are available.
Note) Please consult with SMC for longer strokes.

Accessories

Mounting		Basic	Foot	Rod flange	Head flange	Single clevis	Double clevis	Center trunnion
Standard	Rod end nut	●	●	●	●	●	●	●
	Clevis pin	—	—	—	—	—	●	—
Option	Piston rod ball joint	●	●	●	●	●	●	●
	Rod clevis	●	●	●	●	●	●	●
	Rod boot	●	●	●	●	●	●	●

∗ Do not use a piston rod ball joint (or floating joint) together with a single clevis with a ball joint (or clevis pivot bracket with a ball joint).

Theoretical Output

OUT IN

(N)

Bore size (mm)	Rod size (mm)	Operating direction	Piston area (mm^2)	Operating pressure (MPa)								
				0.2	0.3	0.4	0.5	0.6	0.7	0.8	0.9	1.0
32	12	OUT	804	161	241	322	402	482	563	643	724	804
		IN	691	138	207	276	346	415	484	553	622	691
40	16	OUT	1257	251	377	503	629	754	880	1006	1131	1257
		IN	1056	211	317	422	528	634	739	845	950	1056
50	20	OUT	1963	393	589	785	982	1178	1374	1570	1767	1963
		IN	1649	330	495	660	825	989	1154	1319	1484	1649
63	20	OUT	3117	623	935	1247	1559	1870	2182	2494	2805	3117
		IN	2803	561	841	1121	1402	1682	1962	2242	2523	2803
80	25	OUT	5027	1005	1508	2011	2514	3016	3519	4022	4524	5027
		IN	4536	907	1361	1814	2268	2722	3175	3629	4082	4536
100	25	OUT	7854	1571	2356	3142	3927	4712	5498	6283	7068	7854
		IN	7363	1473	2209	2945	3682	4418	5154	5890	6627	7363
125	32	OUT	12272	2454	3682	4909	6136	7363	8590	9817	11045	12272
		IN	11468	2294	3440	4587	5734	6881	8027	9174	10321	11468

Note) Theoretical output (N) = Pressure (MPa) x Piston area (mm^2)

Weights (Single rod)

(kg)

Bore size (mm)		**32**	**40**	**50**	**63**	**80**	**100**	**125**
Basic weight	Basic	0.55	0.84	1.36	1.77	2.84	3.77	6.82
	Foot	0.16	0.20	0.38	0.46	0.89	1.09	2.60
	Flange	0.20	0.23	0.47	0.58	1.30	1.81	4.10
	Single clevis	0.16	0.23	0.37	0.60	1.07	1.73	4.15
	Double clevis	0.20	0.32	0.45	0.71	1.28	2.11	4.25
	Trunnion	0.71	1.10	1.73	2.48	4.25	5.95	2.98
Additional weight per 50 mm of stroke	All mounting brackets	0.14	0.18	0.30	0.32	0.49	0.54	0.84
Accessories	Single clevis	0.07	0.11	0.22		0.40		1.20
	Double clevis	0.09	0.15	0.34		0.69		1.84

Calculation: Example) **CP96SD40-100**

- Basic weight ····· 0.84 (kg) (Basic, ø40)
- Additional weight ····· 0.18 (kg/50 st)
- Cylinder stroke ····· 100 (st)
- Mounting bracket weight ····· 0.32 (kg) (Double clevis)

0.84 + 0.18 x 100 ÷ 50 + 0.32 = 1.52 kg

Allowable Kinetic Energy

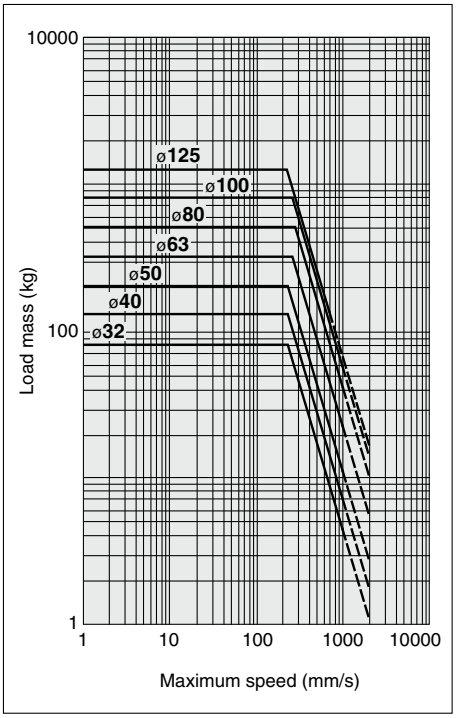

(Example) Find the upper limit of rod end load when an air cylinder of ø63 is operated at 500 mm/s. From a point indicating 500 mm/s on the axis of abscissas, extend a line upward and find a point where it intersects with a line for the 63 mm bore size. Extend a line from the intersection to the left and find a load mass 80 kg.

Construction

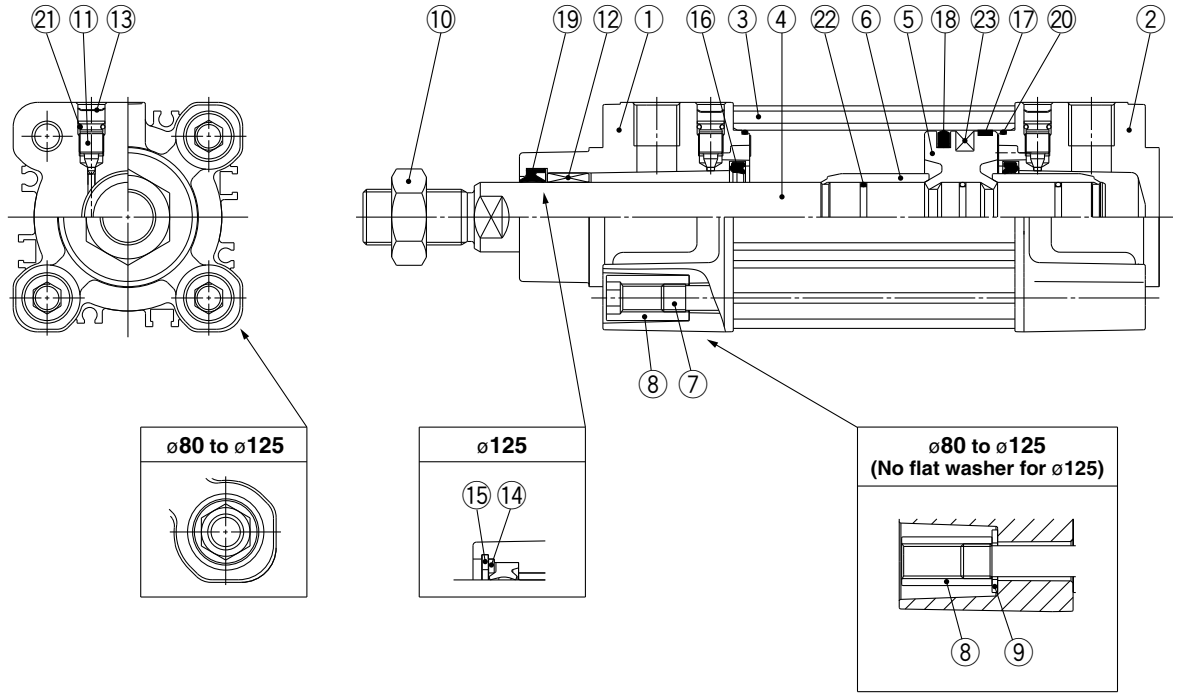

Component Parts

No.	Description	Material	Note
1	**Rod cover**	Aluminum die-cast	
2	**Head cover**	Aluminum die-cast	
3	**Cylinder tube**	Aluminum alloy	
4	**Piston rod**	Carbon steel	
5	**Piston**	Aluminum alloy	
6	**Cushion ring**	Aluminum alloy	
7	**Tie-rod**	Carbon steel	
8	**Tie-rod nut**	Steel	
9	**Flat washer**	Steel	ø80, ø100
10	**Rod end nut**	Steel	
11	**Cushion valve**	Steel wire	
12	**Bushing**	Bearing alloy	
13	**Retaining ring**	Steel for spring	ø40 to ø125
14	**Rod seal holder**	Stainless steel	ø125
15	**Retaining ring**	Steel for spring	ø125
16	**Cushion seal**	Urethane rubber	
17	**Wear ring**	Resin	
18	**Piston seal**	NBR	
19	**Rod seal**	NBR	
20	**Cylinder tube gasket**	NBR	
21	**Cushion valve seal**	NBR	
22	**Piston gasket**	NBR	
23	**Magnet**		

Replacement Parts/Seal Kit (Single rod)

Bore size (mm)	Kit no.	Contents
32	CS95-32	Kits include items ⑯ to ⑳.
40	CS95-40	
50	CS95-50	
63	CS95-63	
80	CS95-80	
100	CS96-100	
125	CS96-125	

∗ Seal kits consist of items ⑯ to ⑳, and can be ordered by using the seal kit number corresponding to each bore size.
∗ The seal kit includes a grease pack (10 g for ø32 to ø50, 20 g for ø63 and ø80, 30 g for ø100 and ø125).
Order with the following part number when only the grease pack is needed.
Grease pack part number: GR-S010 (10 g), GR-S-020 (20 g)

Seal Kit (Double rod)

Bore size (mm)	Kit no.	Contents
32	CS95W-32	Kits include items ⑯ and ⑱ to ⑳.
40	CS95W-40	
50	CS95W-50	
63	CS95W-63	
80	CS95W-80	
100	CS96W-100	
125	CS96W-125	

∗ Seal kits consist of items ⑯ and ⑱ to ⑳, and can be ordered by using the seal kit number corresponding to each bore size.
∗ The seal kit includes a grease pack (10 g for ø32 to ø50, 20 g for ø63 and ø80, 30 g for ø100 and ø125).
Order with the following part number when only the grease pack is needed.
Grease pack part number: GR-S010 (10 g), GR-S-020 (20 g)

Dimensions

Basic: CP96S(D)B Bore size − Stroke

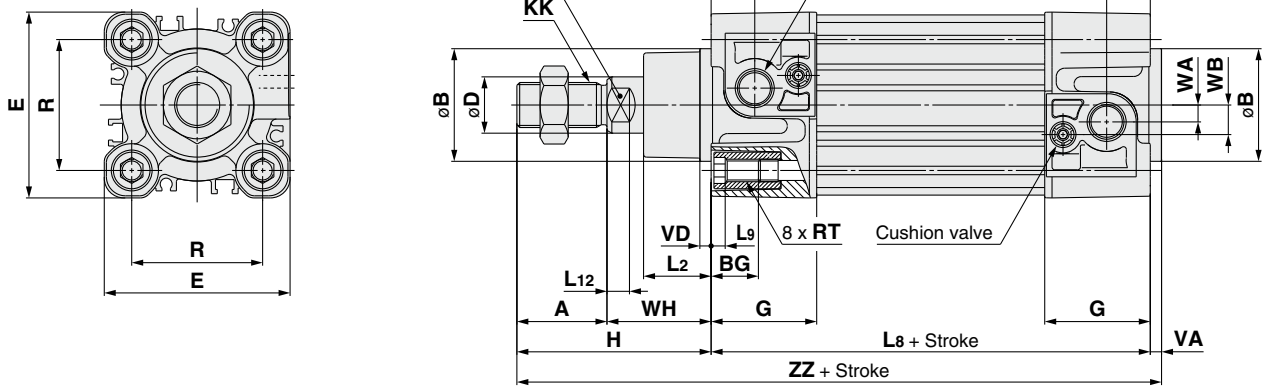

With rod boot

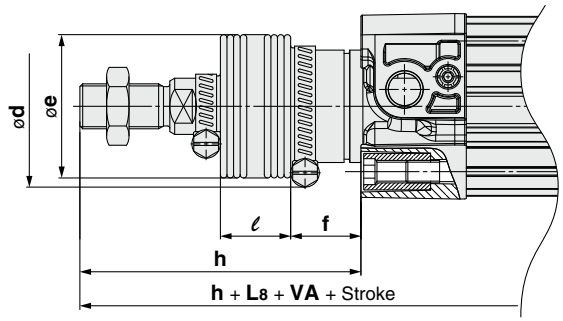

Bore size (mm)	Stroke range (mm)		A	øB d11	øD	EE	PL	RT	L12	KK	SW	G	BG	L8	VD	VA	WA	WB	WH	ZZ	E	R
	Without rod boot	With rod boot																				
32	Up to 2000	Up to 1000	22	30	12	G 1/8	13	M6 x 1	6	M10 x 1.25	10	32	16	94	4	4	4	7	26	146	47	32.5
40	Up to 2000	Up to 1000	24	35	16	G 1/4	14	M6 x 1	6.5	M12 x 1.25	13	37.5	16	105	4	4	5	9	30	163	54	38
50	Up to 2000	Up to 1000	32	40	20	G 1/4	15.5	M8 x 1.25	8	M16 x 1.5	17	37.5	16	106	4	4	6	10.5	37	179	66	46.5
63	Up to 2000	Up to 1000	32	45	20	G 3/8	16.5	M8 x 1.25	8	M16 x 1.5	17	45	16	121	4	4	9	12	37	194	77	56.5
80	Up to 2000	Up to 1000	40	45	25	G 3/8	19	M10 x 1.5	10	M20 x 1.5	22	45	17	128	4	4	11.5	14	46	218	99	72
100	Up to 2000	Up to 1000	40	55	25	G 1/2	19	M10 x 1.5	10	M20 x 1.5	22	50	17	138	4	4	17	15	51	233	118	89
125	Up to 2000	Up to 1000	54	60	32	G 1/2	19	M12 x 1.75	13	M27 x 2	27	58	20	160	6	6	17	15	65	285	144	110

Bore size (mm)	L2	L9	H	ød	øe	f	ℓ												h									
							1 to 50	51 to 100	101 to 150	151 to 200	201 to 300	301 to 400	401 to 500	501 to 600	601 to 700	701 to 800	801 to 900	901 to 1000	1 to 50	51 to 100	101 to 150	151 to 200	201 to 300	301 to 400	401 to 500	501 to 600	601 to 700	701 to 800	801 to 900	901 to 1000
32	15	4	48	54	36	23	12.5	25	37.5	50	75	100	125	150	175	200	225	250	75	88	100	113	138	163	188	213	238	263	288	313
40	17	4	54	54	36	23	12.5	25	37.5	50	75	100	125	150	175	200	225	250	75	88	100	113	138	163	188	213	238	263	288	313
50	24	5	69	64	51	25	12.5	25	37.5	50	75	100	125	150	175	200	225	250	87	100	112	125	150	175	200	225	250	275	300	325
63	24	5	69	64	51	25	12.5	25	37.5	50	75	100	125	150	175	200	225	250	87	100	112	125	150	175	200	225	250	275	300	325
80	30	—	86	68	56	30	12.5	25	37.5	50	75	100	125	150	175	200	225	250	103	116	128	141	166	191	216	241	266	291	316	341
100	32	—	91	76	56	32	12.5	25	37.5	50	75	100	125	150	175	200	225	250	103	116	128	141	166	191	216	241	266	291	316	341
125	40	—	119	82	75	40	10	20	30	40	60	80	100	120	140	160	180	200	130	140	150	160	180	200	220	240	260	280	300	320

Dimensions

Basic: CP96S(D)B Bore size – Stroke W

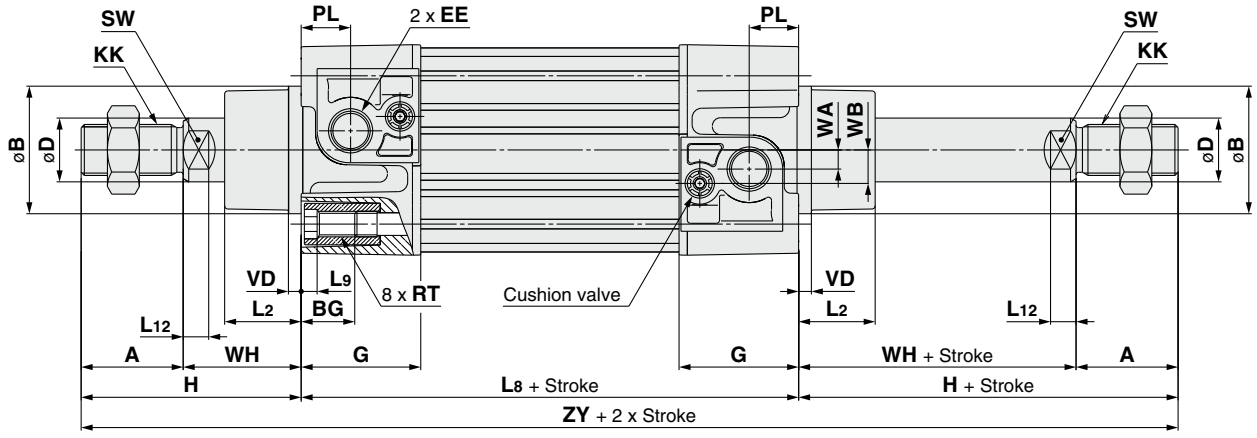

With rod boot at one end

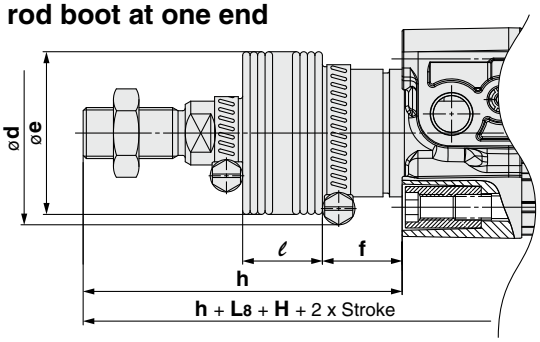

With rod boot at both ends

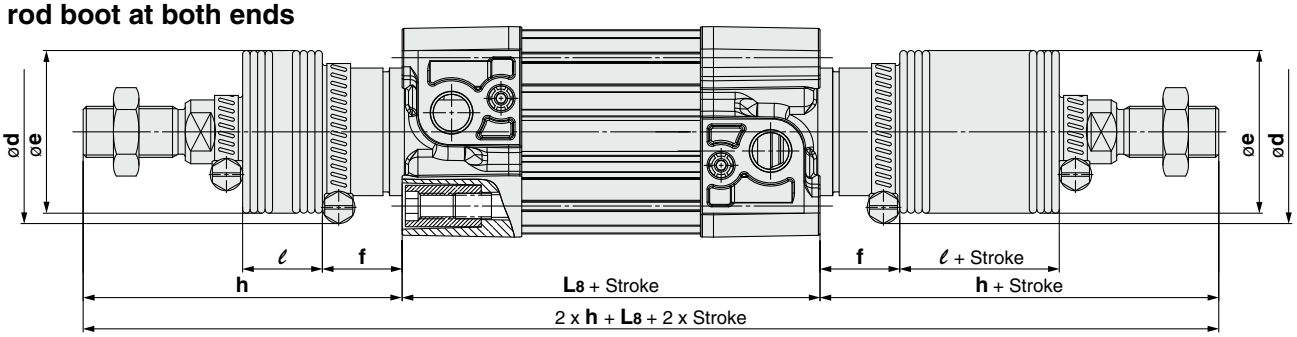

Bore size (mm)	Stroke range (mm)	A	øB d11	øD	EE	PL	RT	L12	KK	SW	G	BG	L8	VD	WA	WB	WH	ZY	L2	L9
32	Up to 1000	22	30	12	G 1/8	13	M6 x 1	6	M10 x 1.25	10	32	16	94	4	4	7	26	190	15	4
40	Up to 1000	24	35	16	G 1/4	14	M6 x 1	6.5	M12 x 1.25	13	37.5	16	105	4	5	9	30	213	17	4
50	Up to 1000	32	40	20	G 1/4	15.5	M8 x 1.25	8	M16 x 1.5	17	37.5	16	106	4	6	10.5	37	244	24	5
63	Up to 1000	32	45	20	G 3/8	16.5	M8 x 1.25	8	M16 x 1.5	17	45	16	121	4	9	12	37	259	24	5
80	Up to 1000	40	45	25	G 3/8	19	M10 x 1.5	10	M20 x 1.5	22	45	17	128	4	11.5	14	46	300	30	—
100	Up to 1000	40	55	25	G 1/2	19	M10 x 1.5	10	M20 x 1.5	22	50	17	138	4	17	15	51	320	32	—
125	Up to 1000	54	60	32	G 1/2	19	M12 x 1.75	13	M27 x 2	27	58	20	160	6	17	15	65	398	40	—

Bore size (mm)	H	ød	øe	f	ℓ												h											
					1 to 50	51 to 100	101 to 150	151 to 200	201 to 300	301 to 400	401 to 500	501 to 600	601 to 700	701 to 800	801 to 900	901 to 1000	1 to 50	51 to 100	101 to 150	151 to 200	201 to 300	301 to 400	401 to 500	501 to 600	601 to 700	701 to 800	801 to 900	901 to 1000
32	48	54	36	23	12.5	25	37.5	50	75	100	125	150	175	200	225	250	75	88	100	113	138	163	188	213	238	263	288	313
40	54	54	36	23	12.5	25	37.5	50	75	100	125	150	175	200	225	250	75	88	100	113	138	163	188	213	238	263	288	313
50	69	64	51	25	12.5	25	37.5	50	75	100	125	150	175	200	225	250	87	100	112	125	150	175	200	225	250	275	300	325
63	69	64	51	25	12.5	25	37.5	50	75	100	125	150	175	200	225	250	87	100	112	125	150	175	200	225	250	275	300	325
80	86	68	56	30	12.5	25	37.5	50	75	100	125	150	175	200	225	250	103	116	128	141	166	191	216	241	266	291	316	341
100	91	76	56	32	12.5	25	37.5	50	75	100	125	150	175	200	225	250	103	116	128	141	166	191	216	241	266	291	316	341
125	119	82	75	40	10	20	30	40	60	80	100	120	140	160	180	200	130	140	150	160	180	200	220	240	260	280	300	320

Dimensions

Axial foot (L)

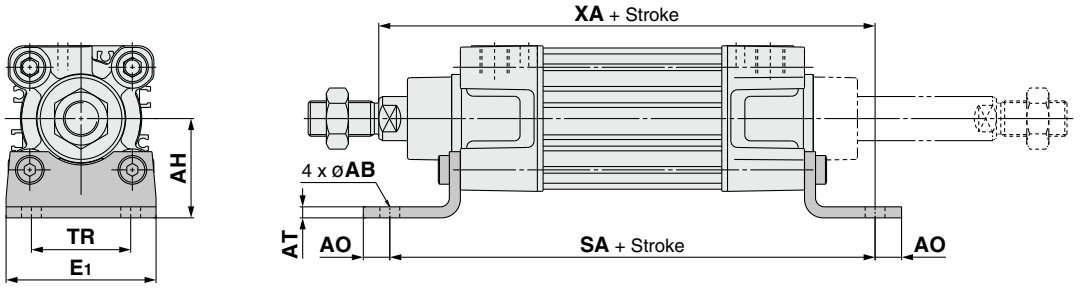

Rod flange (F)

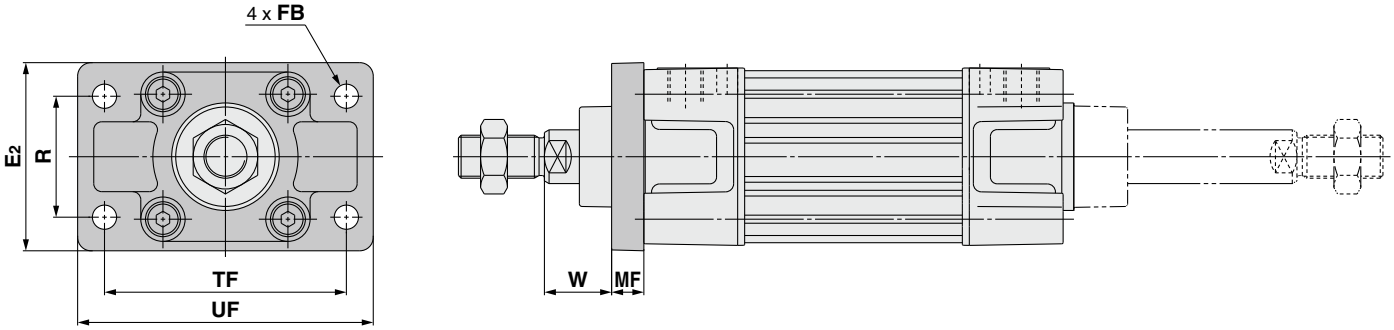

Head flange (G)

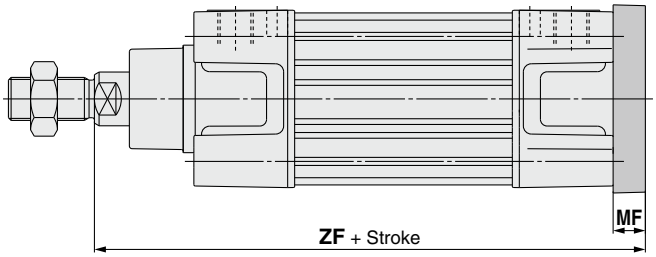

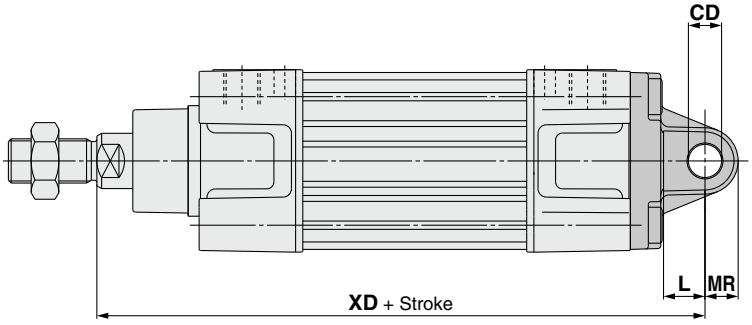

Single clevis (C)

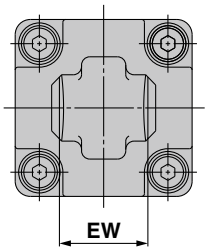

Double clevis (D)

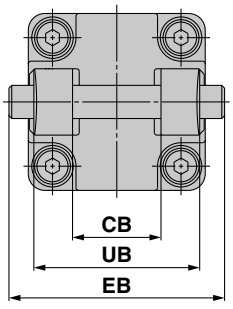

(mm)

Bore size (mm)	E1	TR	AH	AO	AT	AB	SA	XA	R	TF	FB	E2	UF	W	MF	ZF	UB h14	CB H14	EW	CD H9	L	MR	XD	EB
32	48	32	32	10	4.5	7	142	144	32	64	7	50	79	16	10	130	45	26	$26^{-0.2}_{-0.6}$	10	12	9.5	142	65
40	55	36	36	11	4.5	10	161	163	36	72	9	55	90	20	10	145	52	28	$28^{-0.2}_{-0.6}$	12	15	12	160	75
50	68	45	45	12	5.5	10	170	175	45	90	9	70	110	25	12	155	60	32	$32^{-0.2}_{-0.6}$	12	15	12	170	80
63	80	50	50	12	5.5	10	185	190	50	100	9	80	120	25	12	170	70	40	$40^{-0.2}_{-0.6}$	16	20	16	190	90
80	100	63	63	14	6.5	12	210	215	63	126	12	100	153	30	16	190	90	50	$50^{-0.2}_{-0.6}$	16	20	16	210	110
100	120	75	71	16	6.5	14.5	220	230	75	150	14	120	178	35	16	205	110	60	$60^{-0.2}_{-0.6}$	20	25	20	230	140
125	Max. 157	90	90	Max. 25	8	16	250	270	90	180	16	Max.157	Max. 224	45	20	245	130	70	$70^{-0.5}_{-1.2}$	25	Min. 30	Max. 26	275	Max. 157

Series CP96
Auto Switch Mounting



Minimum Stroke for Auto Switch Mounting

(mm)

Auto switch model	Number of auto switches	32	40	50	63	80	100	125
D-M9□	With 2 pcs. (Different surfaces, Same surface)	15				10		
	With 1 pc.	15				10		
	With n pcs.	15 + 5 (n – 2)				10 + 10 (n – 2)		
D-M9□W **D-M9□A**	With 2 pcs. (Different surfaces, Same surface)	15				10		
	With 1 pc.	15				10		
	With n pcs.	15 + 10 (n – 20)				10 + 10 (n – 2)		10 + 15 (n – 2)
D-A9□	With 2 pcs. (Different surfaces, Same surface)	15						
	With 1 pc.	15				10		
	With n pcs.	15 + 10 (n – 20)		15 + 15 (n – 20)				15 + 20 (n – 2)

Note) n = 3 , 4, 5···

Auto Switch Proper Mounting Position (Detection at stroke end)

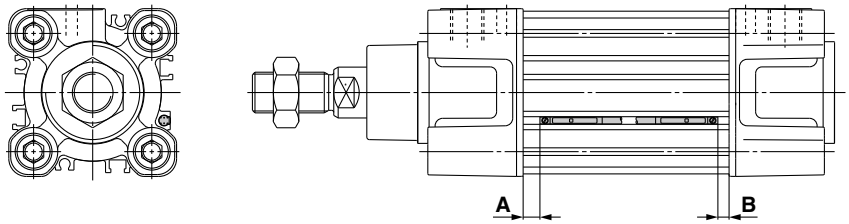

Auto Switch Proper Mounting Position (mm)

Auto switch model / Bore size	D-M9□ D-M9□W D-M9□A		D-A9□	
	A	**B**	**A**	**B**
32	10.5	8	6.5	4
40	10.5	8	6.5	4
50	11	8.5	7	4.5
63	11	8.5	7	4.5
80	14	12.5	10	8.5
100	14	12.5	10	8.5
125	16	16	12	12

Note) Adjust the auto switch after confirming the operating condition in the actual setting.

Operating Range

(mm)

Auto switch model	Bore size						
	32	**40**	**50**	**63**	**80**	**100**	**125**
D-M9□ **D-M9□W** **D-M9□A**	4	4	5	6	5.5	6	7
D-A9□	7	8	8.5	9.5	9.5	10.5	12.5

∗ Values which include hysteresis are for guideline purposes only, they are not a guarantee (assuming approximately ±30% dispersion) and may change substantially depending on the ambient environment.

Other than the applicable auto switches listed in "How to Order", the following auto switches are mountable.

∗ Normally closed (NC = b contact) solid state auto switches (D-F9G/F9H) are also available. For details, refer to the Best Pneumatics No. 2.

How to Mount and Move the Auto Switch

<Applicable Auto Switch>

Solid state switch····· D-M9N/M9P/M9B
D-M9NW/M9PW/M9BW
D-M9NA/M9PA/M9BA

Reed switch····· D-A90/A93/A96

How to Mount and Move the Auto Switch

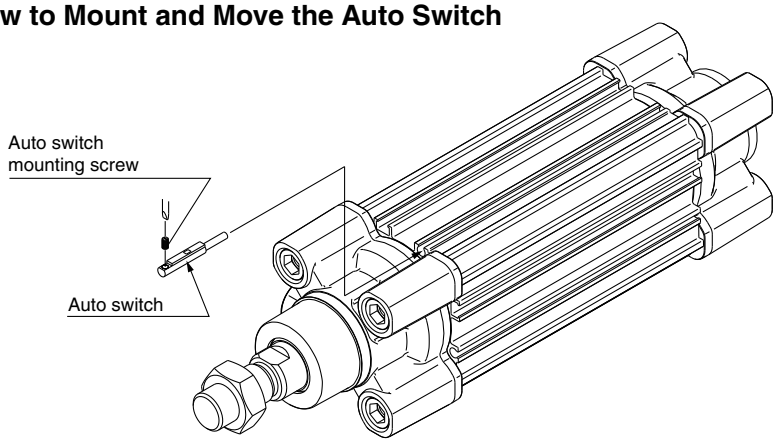

• Use a watchmaker's screwdriver with a handle diameter of 5 to 6 mm when tightening the auto switch mounting screw.

Auto switch mounting screw tightening torque

(N·m)

Auto switch model	Tightening torque
D-M9□ **D-M9□W** **D-M9□A**	0.05 to 0.15
D-A9□	0.10 to 0.20

∗ As a guide, turn 90° from the position where it comes to feel tight.
Note) D-M9□ and A9□ type cannot be mounted on square groove of the CP96 series.

Accessories

Cylinder Mounting Accessories/Part No.

Bore size (mm)	**F** Rod/Head flange	**D** Double clevis (Corresponds to E accessory)	**C** Single clevis	
	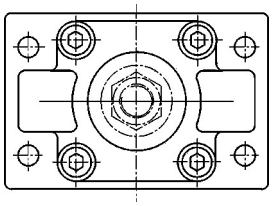	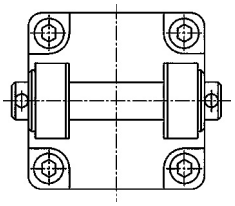	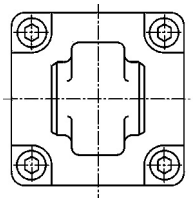	
	∗ Supplied with 4 screws.	∗ Supplied with 4 screws, clevis pin, and safety device.	∗ Supplied with 4 screws.	
			Plain	With ball joint
32	F5032	D5032	C5032	CS5032
40	F5040	D5040	C5040	CS5040
50	F5050	D5050	C5050	CS5050
63	F5063	D5063	C5063	C95063
80	F5080	D5080	C5080	CS5080
100	F5100	D5100	C5100	CS5100
125	F5125	D5125	C5125	CS5125
	Refer to page 62 for dimensions.	Refer to page 81 for dimensions.	Refer to page 81 for dimensions.	

Bore size (mm)	**L** Foot	**DS** Double clevis (for ES accessory)	**ES** Clevis pivot bracket with ball joint	**E** Clevis pivot bracket
	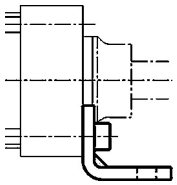	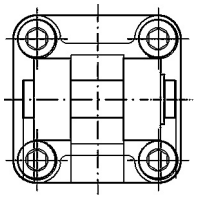	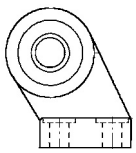	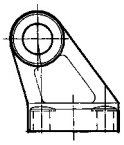
	∗ Supplied with 2 pieces and 4 screws.			
32	L5032	DS5032	ES5032	E5032
40	L5040	DS5040	ES5040	E5040
50	L5050	DS5050	ES5050	E5050
63	L5063	DS5063	ES5063	E5063
80	L5080	DS5080	ES5080	E5080
100	L5100	DS5100	ES5100	E5100
125	L5125	DS5125	ES5125	E5125
	Refer to page 62 for dimensions.	Refer to page 82 for dimensions.	Refer to page 82 for dimensions.	Refer to page 81 for dimensions.

Piston Rod Mounting Accessories/Part No.

Bore size (mm)	**GKM** Rod clevis (ISO 8140)	**KJ** Piston rod ball joint (ISO 8139)	**JA** Floating joint
	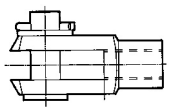	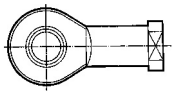	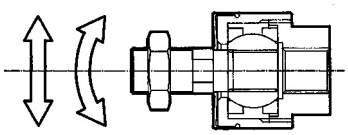
	∗ Supplied with clevis pin and safety device.		
32	GKM10-20	KJ10D	JA30-10-125
40	GKM12-24	KJ12D	JA40-12-125
50	GKM16-32	KJ16D	JA50-16-150
63	GKM16-32	KJ16D	JA50-16-150
80	GKM20-40	KJ20D	JAH50-20-150
100	GKM20-40	KJ20D	JAH50-20-150
125	GKM30-54	KJ27D	JA125-27-200
	Refer to page 83 for dimensions.	Refer to page 83 for dimensions.	Refer to page 83 for dimensions.

Dimensions: Cylinder Mounting Accessories

Single clevis (C)

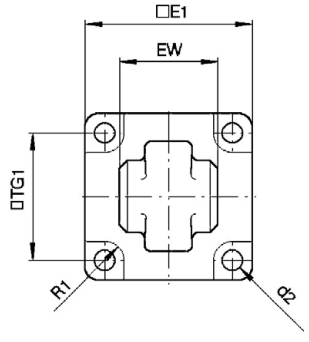

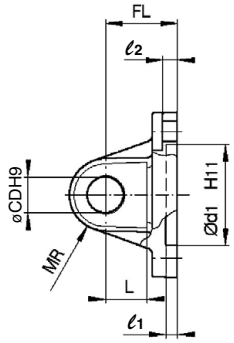

Double clevis (D)

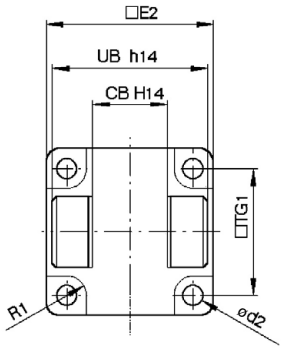

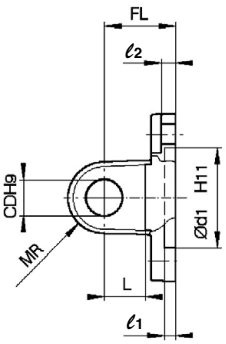

Bore size (mm)	E_1	EW	TG_1	FL	ℓ_1	L	ℓ_2	ød1	øCD	MR	ød2	R_1	E_2	UB	CB
32	45	$26^{-0.2}_{-0.6}$	32.5	22	5	12	5.5	30	10	9.5	6.6	6.5	48	45	26
40	51	$28^{-0.2}_{-0.6}$	38	25	5	15	5.5	35	12	12	6.6	6.5	56	52	28
50	64	$32^{-0.2}_{-0.6}$	46.5	27	5	15	6.5	40	12	12	9	8.5	64	60	32
63	74	$40^{-0.2}_{-0.6}$	56.5	32	5	20	6.5	45	16	16	9	8.5	75	70	40
80	94	$50^{-0.2}_{-0.6}$	72	36	5	20	10	45	16	16	11	11	95	90	50
100	113	$60^{-0.2}_{-0.6}$	89	41	5	25	10	55	20	20	11	12	115	110	60
125	Max.157	$70^{-0.5}_{-1.2}$	110	50	7	30	10	60	25	26	13.5	10	Max.157	130	70

Clevis pivot bracket (E)

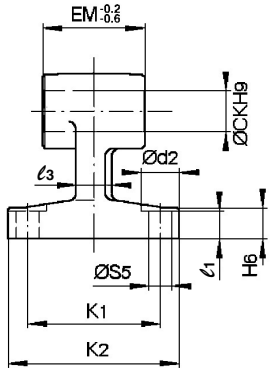

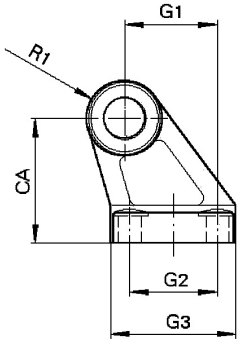

Bore size (mm)	ød2	øCK	øS5	K_1	K_2 (Max.)	ℓ_3 (Max.)	G_1	ℓ_1	G_2	EM	G_3 (Max.)	CA	H_6	R_1
32	11	10	6.6	38	51	10	21	7	18	$26^{-0.2}_{-0.6}$	31	32	8	10
40	11	12	6.6	41	54	10	24	9	22	$28^{-0.2}_{-0.6}$	35	36	10	11
50	15	12	9	50	65	12	33	11	30	$32^{-0.2}_{-0.6}$	45	45	12	12
63	15	16	9	52	67	14	37	11	35	$40^{-0.2}_{-0.6}$	50	50	12	15
80	18	16	11	66	86	18	47	12.5	40	$50^{-0.2}_{-0.6}$	60	63	14	15
100	18	20	11	76	96	20	55	13.5	50	$60^{-0.2}_{-0.6}$	70	71	15	19
125	20	25	14	94	124	30	70	17	60	$70^{-0.5}_{-1.5}$	90	90	20	22.5

Single clevis with ball joint (CS)

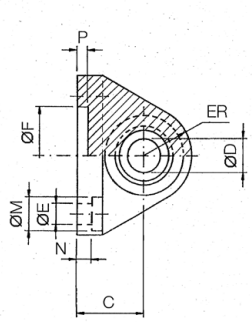

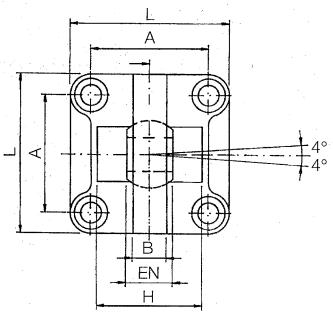

Bore size (mm)	A	B (Max.)	C	øDH7	EN 0 −0.1	ER (Max.)	øFH11	øE	L	øM	N	P	H ±0.5
32	32.5	10.5	22	10	14	15	30	6.6	45	10.5	5.5	5	—
40	38	12	25	12	16	18	35	6.6	55	11	5.5	5	—
50	46.5	15	27	16	21	20	40	9	65	15	6.5	5	51
63	56.5	15	32	16	21	23	45	9	75	15	6.5	5	—
80	72	18	36	20	25	27	45	11	95	18	10	5	70
100	89	18	41	20	25	30	55	11	115	18	10	5	—
125	110	25	50	30	37	40	60	13.5	140	20	10	7	100

∗ Black color

Dimensions: Cylinder Mounting Accessories

Double clevis (DS)

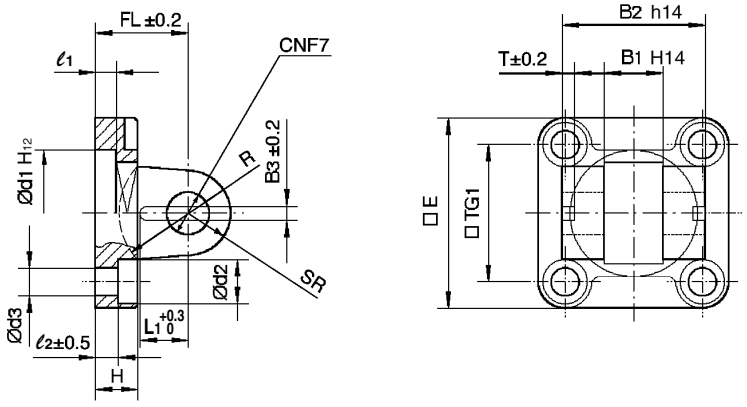

Bore size (mm)	E	B_1	B_2	B_3	L_1	TG_1	T	ℓ_1 (Min.)	ℓ_2	FL	H (Max.)	ød_1	ød_2	ød_3	øCN	SR (Max.)	R
32	45	14	34	3.3	11.5	32.5	3	5	5.5	22	10	30	10.5	6.6	10	11	17
40	55	16	40	4.3	12	38	4	5	5.5	25	10	35	11	6.6	12	13	20
50	65	21	45	4.3	14	46.5	4	5	6.5	27	12	40	15	9	16	18	22
63	75	21	51	4.3	14	56.5	4	5	6.5	32	12	45	15	9	16	18	25
80	95	25	65	4.3	16	72	4	5	10	36	16	45	18	11	20	22	30
100	115	25	75	6.3	16	89	4	5	10	41	16	55	18	11	20	22	32
125	140	37	97	6.3	24	110	6	7	10	50	20	60	20	13.5	30	30	42

∗ Black color

Clevis pivot bracket with ball joint (ES)

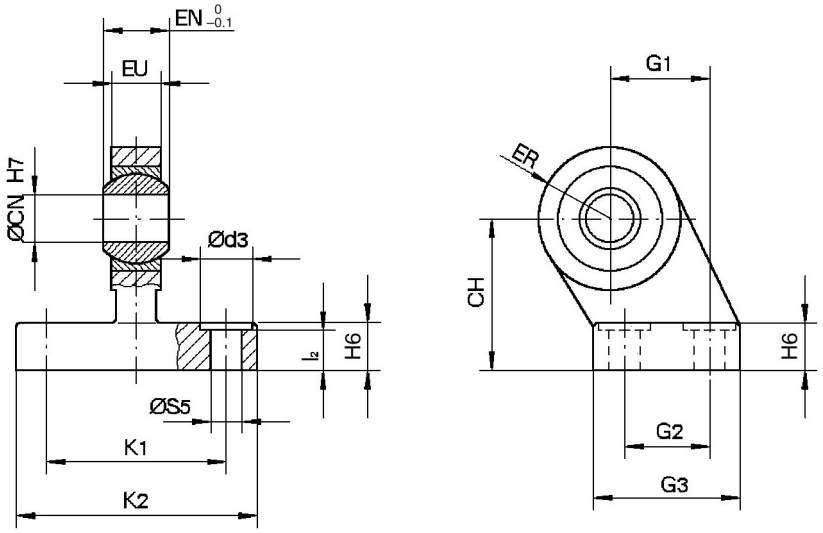

Bore size (mm)	ød_3	øCN	øS_5	K_1	K_2 (Max.)	ℓ_2	G_1	G_2	G_3 (Max.)	EN	EU	CH	H_6	ER (Max.)
32	11	10	6.6	38	51	8.5	21	18	31	14	10.5	32	10	15
40	11	12	6.6	41	54	8.5	24	22	35	16	12	36	10	18
50	15	16	9	50	65	10.5	33	30	45	21	15	45	12	20
63	15	16	9	52	67	10.5	37	35	50	21	15	50	12	23
80	18	20	11	66	86	11.5	47	40	60	25	18	63	14	27
100	18	20	11	76	96	12.5	55	50	70	25	18	71	15	30
125	20	30	13.5	94	124	17	70	60	90	37	25	90	20	40

∗ Black color

Dimensions: Piston Rod Mounting Accessories

Floating Joint JA

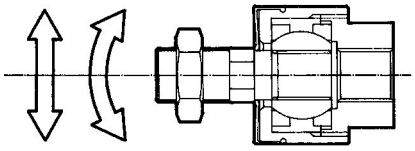

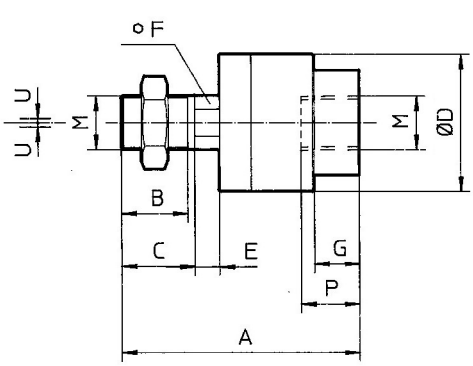

Bore size (mm)	M	Part no.	A	B	C	øD	E	F	G	H	P	U	Load (kN)	Weight (g)	Angle
32	M10 x 1.25	**JA30-10-125**	49.5	19.5	—	24	5	8	8	17	9	0.5	2.5	70	
40	M12 x 1.25	**JA40-12-125**	60	20	—	31	6	11	11	22	13	0.75	4.4	160	
50, 63	M16 x 1.5	**JA50-16-150**	71.5	22	—	41	7.5	14	13.5	27	15	1	11	300	±0.5°
80, 100	M20 x 1.5	**JAH50-20-150**	101	28	31	59.5	11.5	24	16	32	18	2	18	1080	
125	M27 x 2	**JA125-27-200**	123	34	38	66	13	27	20	41	24	2	28	1500	

∗ Black color

Rod Clevis GKM (ISO 8140), Supplied with clevis pin and Safety Device

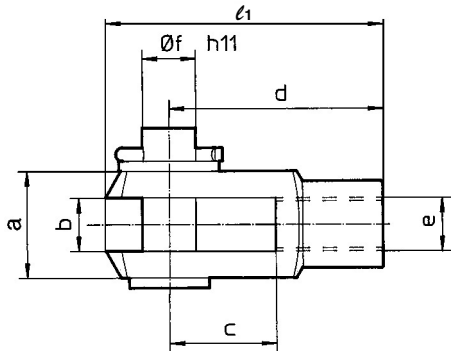

Bore size (mm)	e	Part no.	b	d	øf h11 (Shaft)	øf H9 (Hole)	ℓ1	c (Min.)	a (Max.)
32	M10 x 1.25	**GKM10-20**	$10^{+0.5}_{+0.15}$	40	10	10	52	20	20
40	M12 x 1.25	**GKM12-24**	$12^{+0.5}_{+0.15}$	48	12	12	62	24	24
50, 63	M16 x 1.5	**GKM16-32**	$16^{+0.5}_{+0.15}$	64	16	16	83	32	32
80, 100	M20 x 1.5	**GKM20-40**	$20^{+0.5}_{+0.15}$	80	20	20	105	40	40
125	M27 x 2	**GKM30-54**	$30^{+0.5}_{+0.15}$	110	30	30	148	54	55

Piston Rod Ball Joint KJ (ISO 8139)

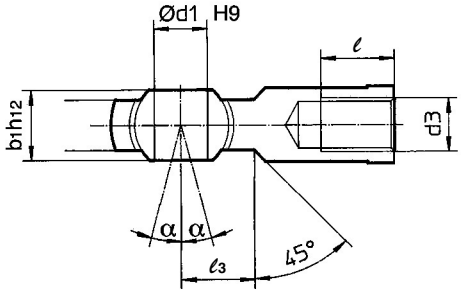

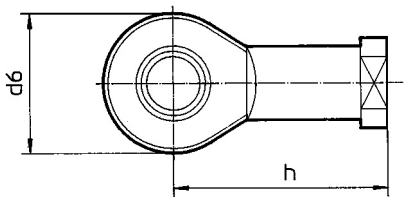

Bore size (mm)	d3	Part no.	ød1 H9	h	d6 (Max.)	b1 h12	ℓ (Min.)	α	ℓ3
32	M10 x 1.25	**KJ10D**	10	43	28	14	20	4°	15
40	M12 x 1.25	**KJ12D**	12	50	32	16	22	4°	17
50, 63	M16 x 1.5	**KJ16D**	16	64	42	21	28	4°	23
80, 100	M20 x 1.5	**KJ20D**	20	77	50	25	33	4°	27
125	M27 x 2	**KJ27D**	30	110	70	37	51	4°	36

Series CP96/C96
Simple Specials

These changes are dealt with Simple Specials System.

1 Change of Rod End Shape

Symbol
-XA0 to -XA30

Applicable Series

Series	Description	Model	Action	Symbol for change of rod end shape
C96	Standard type	C96S	Double acting, Single rod	XA0 to 30
		C96SW	Double acting, Double rod	XA0 to 30
	Smooth type	C96Y	Double acting, Single rod	XA0 to 30
CP96	Standard type	CP96S	Double acting, Single rod	XA0 to 30
		CP96SW	Double acting, Double rod	XA0 to 30

⚠ Precautions

1. SMC will make appropriate arrangements if no dimension, tolerance, or finish instructions are given in the diagram.
2. Standard dimensions marked with "*" will be as follows to the rod diameter (D). Enter any special dimension you desire.
   D ≤ 6 → D-1 mm 6 < D ≤ 25 → D-2 mm D > 25 → D-4 mm
3. In the case of double rod type and single acting retraction type, enter the dimensions when the rod is retracted.
4. Only the single side of a double rod is able to manufacture.

Symbol: A0

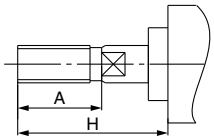

Symbol: A1

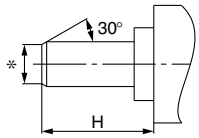

Symbol: A2

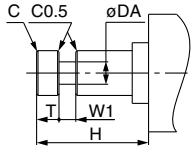

Symbol: A3

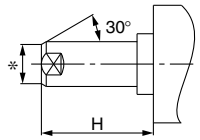

Symbol: A4

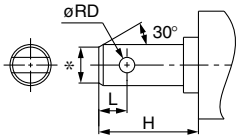

Symbol: A5

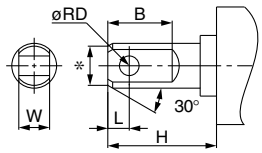

Symbol: A6

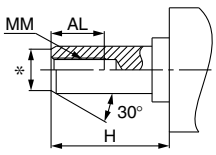

Symbol: A7

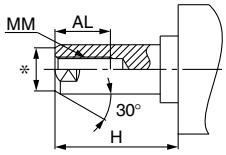

Symbol: A8

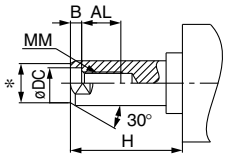

Symbol: A9

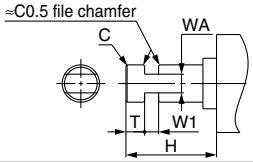

Symbol: A10

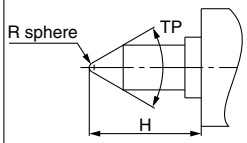

Symbol: A11

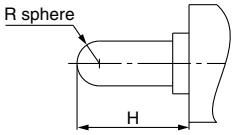

Symbol: A12

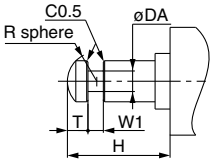

Symbol: A13

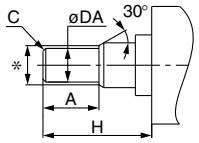

Symbol: A14

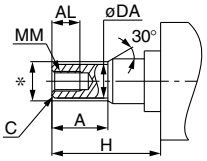

Symbol: A15

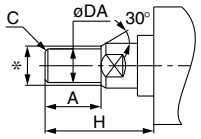

Symbol: A16

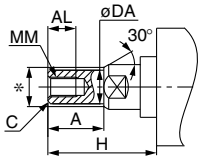

Symbol: A17

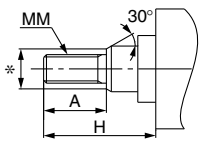

Symbol: A18

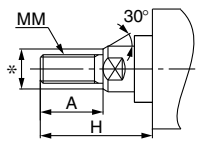

Symbol: A19

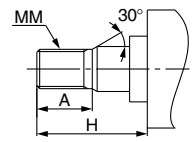

Symbol: A20

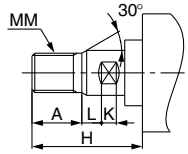

Symbol: A21

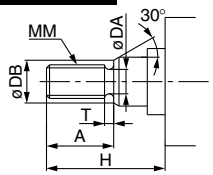

Symbol: A22

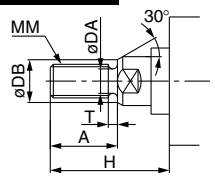

Symbol: A23

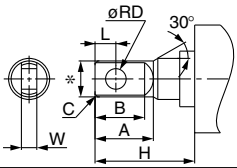

Symbol: A24

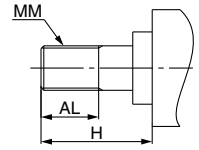

Symbol: A25

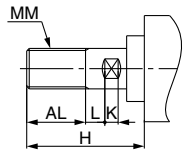

Symbol: A26

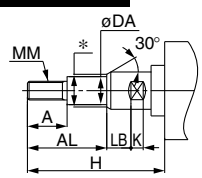

Symbol: A27

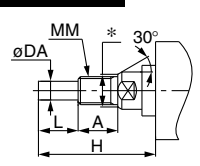

Symbol: A28

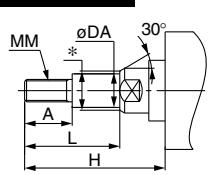

Symbol: A29

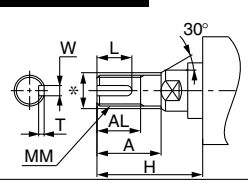

Symbol: A30

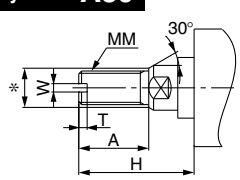

SMC

Symbol
-XC14

2 Change of Trunnion Bracket Mounting Position

The position for mounting the trunnion pivot bracket on the cylinder can be moved from the standard mounting position to any desired position.

Applicable Series

Series	Description	Model	Action	Note
C96	Standard type	**C96**	Double acting, Single rod	
		C96W	Double acting, Double rod	

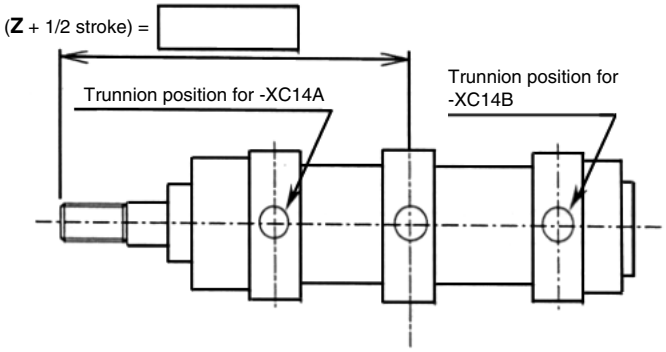

⚠ Precautions

1. Specify "Z + 1/2 stroke" in the case the trunnion bracket position is not -XC14A, B or trunnion is not a center trunnion.
2. SMC will make appropriate arrangements if no dimension, tolerance, or finish instructions are given in the diagram.
3. The possible range of trunnion bracket mounting position is indicated in the table below.
4. Some trunnion mounting positions do not allow auto switch mounting. Please consult with SMC for more information.

Series C96

(mm)

Symbol / Bore size	Trunnion bracket position			
	For -XC14		Reference: Standard (Center trunnion)	Minimum stroke
	Minimum	Maximum		
32	89	101 + Stroke	95 + 0.5 stroke	0
40	103	110 + Stroke	106.5 + 0.5 stroke	
50	118	126 + Stroke	122 + 0.5 stroke	
63	128.5	130.5 + Stroke	129.5 + 0.5 stroke	
80	148.5	151.5 + Stroke	150 + 0.5 stroke	
100	161.5	158.5 + Stroke	160 + 0.5 stroke	5
125	202.5	195.5 + Stroke	199 + 0.5 stroke	10

Made to Order

Please contact SMC for detailed dimensions, specifications and lead times.

Made to Order

Symbol **-XB6**

3 Heat Resistant Cylinder (–10 to 150°C)

Air cylinder which changed the seal material and grease, so that it could be used even at higher temperature up to 150 from –10°C.

Applicable Series

Series	Description	Model	Action	Note	Page for the standard type
CP96	Air cylinder	**CP96S**	Double acting, Single rod		Page 43
		CP96SW	Double acting, Double rod		
C96	Air cylinder	**C96S**	Double acting, Single rod		Page 56
		C96SW	Double acting, Double rod		

Note 1) Operate without lubrication from a pneumatic system lubricator.
Note 2) Please contact SMC for details on the maintenance intervals for this cylinder, which differ from those of the standard cylinder.
Note 3) In principle, it is impossible to make built-in magnet type and the one with auto switch. But, as for the one with auto switch, and the heat resistant cylinder with heat resistant auto switch, since it will be differed depending on the series, please contact SMC.
Note 4) Piston speed is ranged from 50 to 500 mm/s.

How to Order

Standard model no. **–XB6**

Heat resistant cylinder

Specifications

Ambient temperature range	–10 to 150°C
Seal material	Fluororubber
Grease	Heat resistant grease
Specifications other than above and external dimensions	Same as standard type

⚠ Warning

Precautions

Be aware that smoking cigarettes etc. after your hands have come into contact with the grease used in this cylinder can create a gas that is hazardous to humans.

Symbol **-XB7**

4 Cold Resistant Cylinder (–40 to 70°C)

Air cylinder which changed the seal material and grease, so that it could be used even at lower temperature down to –40°C.

Applicable Series

Series	Description	Model	Action	Note	Page for the standard type
C96	Air cylinder	**C96S**	Double acting, Single rod	Except with auto switch. Mounting bracket: Basic type only. Minimum operating pressure 0.2 MPa	Page 56

Note 1) Operate without lubrication from a pneumatic system lubricator.
Note 2) Use dry air which is suitable for heatless air dryer etc. not to cause the moisture to be frozen.
Note 3) Please contact SMC for details on the maintenance intervals for this cylinder, which differ from those of the standard cylinder.
Note 4) Mounting auto switch is impossible.

How to Order

Standard model no. **–XB7**

Cold resistant cylinder

Specifications

Ambient temperature range	–40 to 70°C
Seal material	Low nitrile rubber
Grease	Cold resistant grease
Auto switch	Not mountable
Dimensions	Same as standard type
Specifications other than above	Same as standard type

⚠ Warning

Precautions

Be aware that smoking cigarettes etc. after your hands have come into contact with the grease used in this cylinder can create a gas that is hazardous to humans.

Symbol

5 With Heavy Duty Scraper — -XC4

It is suitable for using cylinders under the environment, where there are much dusts in a surrounding area by using a heavy duty scraper on the wiper ring, or using cylinders under earth and sand exposed to the die-casted equipment, construction machinery, or industrial vehicles.

Applicable Series

Series	Description	Model	Action	Note	Page for the standard type
CP96	Air cylinder	**CP96S**	Double acting, Single rod	ø32 to ø100	Page 43
		CP96SW	Double acting, Double rod	ø32 to ø100	
C96	Air cylinder	**C96S**	Double acting, Single rod	ø32 to ø100	Page 56
		C96SW	Double acting, Double rod	ø32 to ø100	

How to Order

Standard model no. **−XC4**

With heavy duty scraper (SCB scraper)

Specifications: Same as standard type

Dimensions: Same as standard type

⚠Caution

Do not replace heavy duty scrapers.

Since heavy duty scrapers are press-fit, do not replace the cover only, but rather the entire rod cover assembly.

Symbol

6 Tie-rod, Cushion Valve, Tie-rod Nut, etc. Made of Stainless Steel — -XC7

When using in locations where the rust generation or corrosion likelihood exists, the standard parts material have been partly changed to the stainless steel.

Applicable Series

Series	Description	Model	Action	Page for the standard type
CP96	Air cylinder	**CP96S**	Double acting, Single rod	Page 43
		CP96SW	Double acting, Double rod	
C96	Air cylinder	**C96S**	Double acting, Single rod	Page 56
		C96SW	Double acting, Double rod	

How to Order

Standard model no. **−XC7**

Tie-rod, cushion valve, tie-rod nut, etc. made of stainless steel

Specifications

Parts changed to stainless steel	Tie-rod, Tie-rod nut, Mounting bracket nut, Spring washer, Cushion valve, Lock nut
Specifications other than above	Same as standard type
Dimensions	Same as standard type

Symbol
7 Dual Stroke Cylinder/Double Rod Type -XC10

Two cylinders are constructed as one cylinder in a back-to-back configuration allowing the cylinder stroke to be controlled in three steps.

Applicable Series

Series	Description	Model	Action	Note	Page for the standard type
CP96	Air cylinder	**CP96S**	Double acting, Single rod	Except clevis and trunnion types	Page 43
C96	Air cylinder	**C96S**	Double acting, Single rod	Except clevis and trunnion types	Page 56

How to Order

CP96S
C96S | Mounting style | Bore size | − | Stroke A | + | Stroke B | − | XC10

Dual stroke cylinder

Specifications

Series	Bore size (mm)	Maximum manufacturable stroke (mm)
CP96	32 to 125	1000
C96		

Function

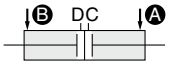

When air pressure is supplied to ports A and B, both A and B strokes retract.

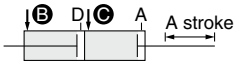

When air pressure is supplied to ports B and C, A out strokes.

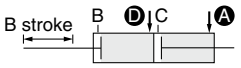

When air pressure is supplied to ports A and D, B out strokes.

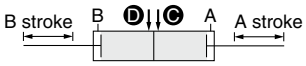

When air pressure is supplied to ports C and D, both strokes A and B out strokes.

Dimensions (Dimensions other than below are the same as standard type.)

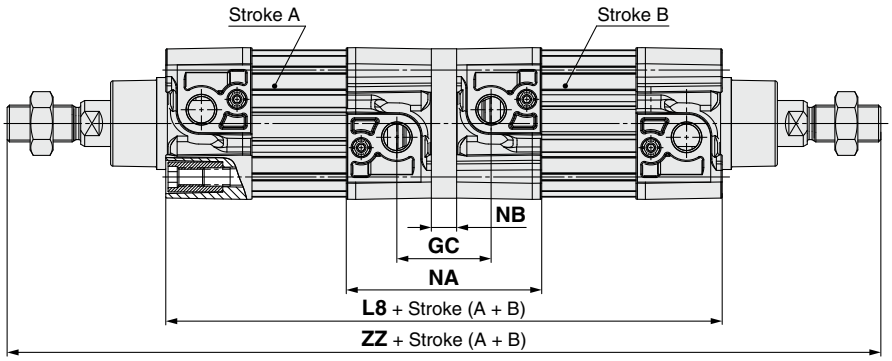

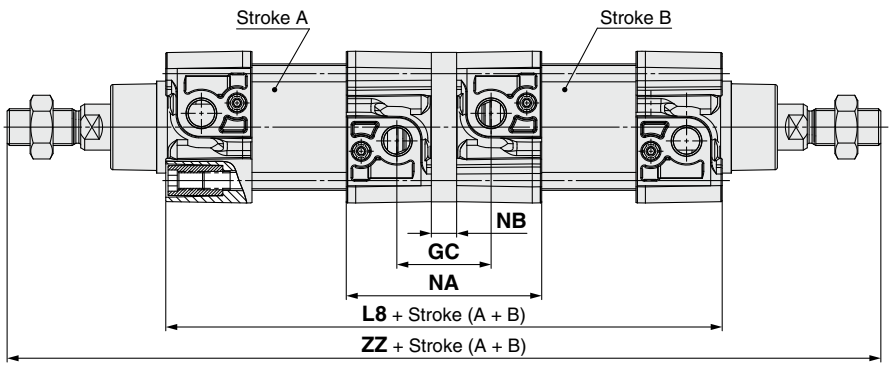

Bore size (mm)	L8	ZZ	NA	NB	GC
ø**32**	198	294	74	10	36
ø**40**	220	328	85	10	38
ø**50**	222	360	85	10	41
ø**63**	252	390	100	10	43
ø**80**	270	442	104	14	52
ø**100**	290	472	114	14	52
ø**125**	334	572	130	14	52

Symbol
-XC11

8 Dual Stroke Cylinder/Single Rod Type

Two cylinders can be integrated by connecting them in line, and the cylinder stroke can be controlled in two stages in both directions.

Applicable Series

Series	Description	Model	Action	Note	Page for the standard type
CP96	Air cylinder	**CP96S**	Double acting, Single rod	Except trunnion type	Page 43
C96	Air cylinder	**C96S**	Double acting, Single rod	Except trunnion type	Page 56

How to Order

CP96S / C96S [Mounting style] [Bore size] − [Stroke A] + [Stroke B-A] − **XC11**

XC11: Dual stroke cylinder/Single rod type

Specifications: Same as standard type

Function

Functional description of dual stroke cylinder

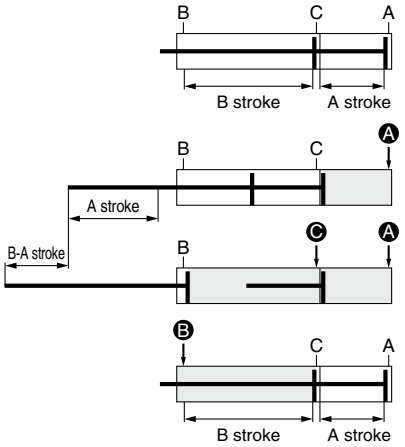

1) Initial state
(0 stroke position)

2) 1st stage: A stroke operation
When the air pressure is supplied from the A port, the rod operates the A stroke.

3) 2nd stage: B-A stroke operation
Following the 1st stage, when the air pressure is supplied from the C port, the rod operates the B-A stroke.

4) Cylinder retraction
When the air pressure is supplied from the B port, the rod retracts completely.

A stroke or B stroke operation can be made individually.

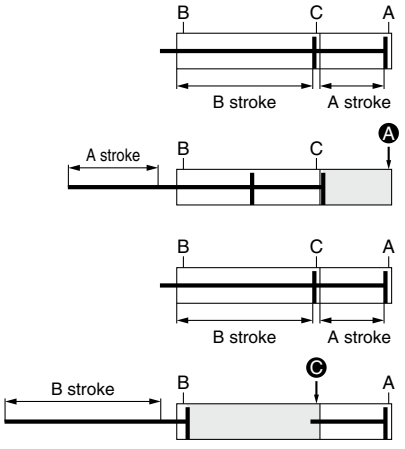

A stroke operation

1) Initial state
(0 stroke position)

2) Operation
When the air pressure is supplied from the A port, the rod operates the A stroke.

B stroke operation

1) Initial state
(0 stroke position)

2) Operation
When the air pressure is supplied from the C port, the rod operates the B stroke.

Double output is possible.

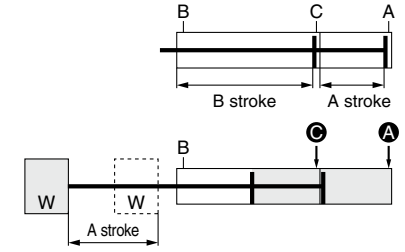

1) Initial state
(0 stroke position)

2) Double output
When the air pressure is supplied to the A and C ports at the same time, the double output can be obtained in the A stroke range.

Precautions

⚠Caution

1. Do not supply air until the cylinder is fixed with the attached bolt.

2. If air is supplied without securing the cylinder, the cylinder could lurch, posing the risk of bodily injury or damage to the peripheral equipment.

Symbol
8 Dual Stroke Cylinder/Single Rod Type -XC11

Dimensions (Dimensions other than below are the same as standard type.)

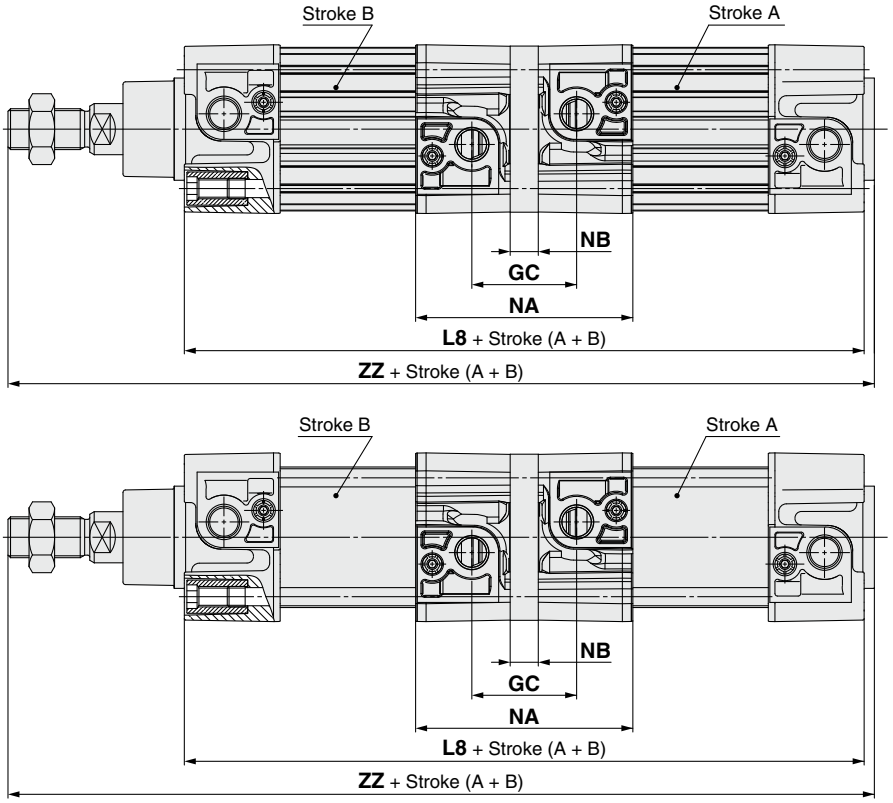

Bore size (mm)	L8	ZZ	NA	NB	GC
ø32	199	251	74	10	36
ø40	221	279	85	10	38
ø50	223	296	85	10	41
ø63	253	326	100	10	43
ø80	271	361	104	14	52
ø100	291	386	114	14	52
ø125	335	460	130	14	52

Symbol
9 Fluororubber Seal -XC22

Applicable Series

Series	Description	Model	Action	Note	Page for the standard type
CP96	Air cylinder	CP96S	Double acting, Single rod		Page 43
		CP96SW	Double acting, Double rod		
C96	Air cylinder	C96S	Double acting, Single rod		Page 56
		C96SW	Double acting, Double rod		

How to Order

Standard model no. − XC22

Fluororubber seal

Specifications

Seal material	Fluororubber
Ambient temperature range	With auto switch: −10°C to 60°C (No freezing) Note 1) Without auto switch: −10°C to 70°C (No freezing)
Specifications other than above and external dimensions	Same as standard type for each series

Note 1) Please contact SMC, as the type of chemical and the operating temperature may not allow the use of this product.

Note 2) Cylinders with auto switches can also be produced; however, auto switch related parts (auto switch units, mounting brackets, built-in magnets) are the same as standard products.
Before using these, please contact SMC regarding their suitability for the operating environment.

10 With Coil Scraper

Symbol **-XC35**

It gets rid of frost, ice, weld spatter, cutting chips adhered to the piston rod, and protects the seals etc.

Applicable Series

Series	Description	Model	Action	Note	Page for the standard type
CP96	Air cylinder	**CP96S**	Double acting, Single rod	ø32 to ø100	Page 43
		CP96SW	Double acting, Double rod	ø32 to ø100	
C96	Air cylinder	**C96S**	Double acting, Single rod	ø32 to ø100	Page 56
		C96SW	Double acting, Double rod	ø32 to ø100	

How to Order

Standard model no. – **XC35**

With coil scraper

Specifications: Same as standard type

Dimensions: Same as standard type

11 Made of Stainless Steel (With Hard Chrome Plated Piston Rod)

Symbol **-XC68**

Suitable for the cases it is likely to generate rust by being immersed in the water and corrosion.

Applicable Series

Series	Description	Model	Action	Page for the standard type
CP96	Air cylinder	**CP96S**	Double acting, Single rod	Page 43
		CP96SW	Double acting, Double rod	
C96	Air cylinder	**C96S**	Double acting, Single rod	Page 56
		C96SW	Double acting, Double rod	

Note) There is a maximum stroke limit for C(P)96 cylinder.

Maximum Stroke

(mm)

Series	Double acting, Single rod	Double acting, Double rod
CP96	ø32: 1800 ø40 to ø100: 1700 ø125: 1600	1000 (Same as standard type)
C96	ø32: 1000 ø40 to ø100: 1700 ø125: 1600	1000 (Same as standard type)

Specifications

Parts changed to stainless steel	Piston rod, Rod end nut
Other specifications and external dimensions	Same as standard type

How to Order

Standard model no. – **XC68**

Made of stainless steel
(With hard chrome plated piston rod)