Modular Type Filter Regulator
AW Series

Filter Regulator AW Series	Model	Port size	Set pressure	Options
	AW20(K)-D	1/8, 1/4	0.05 to 0.85 MPa 0.02 to 0.2 MPa	Bracket Set nut (for panel mount) Float type auto drain Square embedded type pressure gauge Digital pressure switch Round type pressure gauge
	AW30(K)-D	1/4, 3/8		
	AW40(K)-D	1/4, 3/8, 1/2		
	AW40(K)-06-D	3/4		
	AW60(K)-D	3/4, 1		Bracket Float type auto drain Square embedded type pressure gauge Digital pressure switch Round type pressure gauge

p. 95 to 109

Filter Regulator
AW20-D to AW60-D
Filter Regulator with Backflow Function
AW20K-D to AW60K-D

Symbol

Filter Regulator

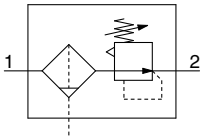

Filter Regulator with Backflow Function

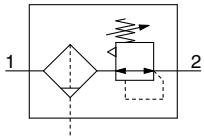

- **Integrated filter and regulator units save space and require less piping.**
- **Models with the backflow function include a mechanism which allows for the air pressure in the outlet side to be released to the inlet side.**

Example)
When the air supply is cut off and releasing the inlet pressure to the atmosphere, the residual pressure release of the outlet side can be ensured for a safety purpose.

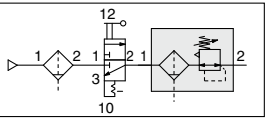

How to Order

AW 30 ❶ ❷ – ❸ 03 ❹ BE ❺ – ❻ – D

- Option/Semi-standard: Select one each for **a** to **i**.
- Option/Semi-standard symbol: When more than one specification is required, indicate in alphanumeric order.

Example) AW30K-03BE-1NR-D

			Symbol	Description	❶ Body size 20	30	40	60
❷	With backflow function		**Nil**	Without backflow function	●	●	●	●
			K[*1]	With backflow function	●	●	●	●
			+					
❸	Pipe thread type		**Nil**	Rc	●	●	●	●
			N	NPT	●	●	●	●
			F	G	●	●	●	●
			+					
❹	Port size		**01**	1/8	●	—	—	—
			02	1/4	●	●	●	—
			03	3/8	—	●	●	—
			04	1/2	—	—	●	—
			06	3/4	—	—	●	●
			10	1	—	—	—	●
			+					
❺	Option[*2]	**a** Mounting	**Nil**	Without mounting option	●	●	●	●
			B[*3]	With bracket	●	●	●	●
			H	With set nut (for panel mount)	●	●	●	—
			+					
		b Float type auto drain[*4]	**Nil**	Without auto drain	●	●	●	●
			C[*5]	N.C. (Normally closed) Drain port is closed when pressure is not applied.	●	●	●	●
			D[*6]	N.O. (Normally open) Drain port is open when pressure is not applied.	—	●	●	●
			+					
		c Pressure gauge[*7]	**Nil**	Without pressure gauge	●	●	●	●
			E	Square embedded type pressure gauge (with limit indicator)	●	●	●	●
			G	Round type pressure gauge (with limit indicator)	●	●	●	●
			M	Round type pressure gauge (with color zone)	●	●	●	●
		c Digital pressure switch[*8]	**E1**	Output: NPN output, Electrical entry: Wiring bottom entry	●	●	●	●
			E2	Output: NPN output, Electrical entry: Wiring top entry	●	●	●	●
			E3	Output: PNP output, Electrical entry: Wiring bottom entry	●	●	●	●
			E4	Output: PNP output, Electrical entry: Wiring top entry	●	●	●	●
			+					
❻	Semi-standard	**d** Set pressure[*9]	**Nil**	0.05 to 0.85 MPa setting	●	●	●	●
			1	0.02 to 0.2 MPa setting	●	●	●	●
			+					
		e Bowl[*10]	**Nil**	Polycarbonate bowl	●	●	●	●
			2	Metal bowl	●	●	●	●
			6	Nylon bowl	●	●	●	●
			8	Metal bowl with level gauge	—	●	●	●
			C	With bowl guard	●	—[*11]	—[*11]	—[*11]
			6C	With bowl guard (Nylon bowl)	●	—[*12]	—[*12]	—[*12]
			+					
		f Drain port[*13]	**Nil**	With drain cock	●	●	●	●
			J[*14]	Drain guide 1/8	●	—	—	—
				Drain guide 1/4	—	●	●	●
			W[*15]	Drain cock with barb fitting	—	●	●	●

CAT.ES40-69C 2023-05

AW30-D

			Symbol	Description	❶ Body size 20	30	40	60
❻ Semi-standard	g	Exhaust mechanism	**Nil**	Relieving type	●	●	●	●
			N	Non-relieving type	●	●	●	●
			+					
	h	Flow direction	**Nil**	Flow direction: Left to right	●	●	●	●
			R	Flow direction: Right to left	●	●	●	●
			+					
	i	Unit	**Nil**	Unit on product label: MPa, °C, Pressure gauge in SI units: MPa	●	●	●	●
			Z∗16	Unit on product label: psi, °F, Pressure gauge: MPa/psi dual scale	○∗18	○∗18	○∗18	○∗18
			ZA∗17	Digital pressure switch: With unit selection function	△∗19	△∗19	△∗19	△∗19

∗1 Set the inlet pressure to at least 0.05 MPa higher than the set pressure.
∗2 Options B, G, H, and M are not assembled and supplied loose at the time of shipment.
∗3 The assembly consists of a bracket and set nuts (applicable to the AW20(K)-D to AW40(K)-D).
For the AW60(K)-D, the assembly consists of 2 types of the bracket and 2 mounting screws.
∗4 The auto drain port is ø10 One-touch fitting (❸ Pipe thread type: Rc, G) or ø3/8" One-touch fitting (❸ Pipe thread type: NPT)
∗5 When pressure is not applied, condensate which does not start the auto drain mechanism will be left in the bowl. Releasing the residual condensate before ending operations for the day is recommended.
∗6 If the compressor is small (0.75 kW, discharge flow is less than 100 L/min (ANR)), air leakage from the drain cock may occur during the start of operations. N.C. type is recommended.
∗7 When the pressure gauge is attached, a 1.0 MPa pressure gauge will be fitted for standard (0.85 MPa) type. 0.4 MPa pressure gauge for 0.2 MPa type.
∗8 When choosing with H (panel mount), the installation space for lead wires will not be secured. In this case, select "wiring bottom entry" for the electrical entry.
∗9 Pressure can be set higher than the specification pressure in some cases, but use pressure within the specification range.
∗10 Refer to chemical data on page 109 for chemical resistance of the bowl.
∗11 A bowl guard is provided as standard equipment (polycarbonate).
∗12 A bowl guard is provided as standard equipment (nylon).
∗13 The combination of float type auto drain C and D is not available.
∗14 Without a valve function. The mounting screws are the same as the thread of ❸.
∗15 The combination of metal bowl 2 and 8 is not available.
∗16 For the pipe thread type: NPT. This product is for overseas use only according to the New Measurement Act. (The SI unit type is provided for use in Japan.)
Cannot be used with M: Round type pressure gauge (with color zone). Available by request for special. The digital pressure switch will be equipped with the unit selection function, setting to psi initially.
∗17 For options: E1, E2, E3, E4
This product is for overseas use only according to the New Measurement Act. (The SI unit type is provided for use in Japan.)
∗18 ○: For the pipe thread type: NPT only
∗19 △: Select with options: E1, E2, E3, E4.

AW20-D to AW60-D Series
AW20K-D to AW60K-D Series

Standard Specifications

Model		AW20-D	AW30-D	AW40-D	AW40-06-D	AW60-D
Port size		1/8, 1/4	1/4, 3/8	1/4, 3/8, 1/2	3/4	3/4, 1
Pressure gauge port size∗1		1/8				
Fluid		Air				
Ambient and fluid temperatures∗2		–5 to 60°C (No freezing)				
Proof pressure		1.5 MPa				
Max. operating pressure		1.0 MPa				
Auto drain minimum operating pressure	**N.C.**	0.1 MPa	0.15 MPa			
	N.O.	—	0.1 MPa			
Set pressure range		0.05 to 0.85 MPa				
Nominal filtration rating∗3		5 µm				
Compressed air purity class∗4		ISO 8573-1:2010 [6 : 4 : 4]∗5				
Drain capacity		8 cm^3	25 cm^3	45 cm^3		
Bowl material		Polycarbonate				
Bowl guard		Semi-standard (Steel)	Standard (Polycarbonate)			
Construction		Relieving type				
Weight		0.18 kg	0.34 kg	0.64 kg	0.69 kg	1.76 kg

∗1 Pressure gauge connection threads are not available for F.R.L. unit with a square embedded type pressure gauge or with a digital pressure switch.
∗2 –5 to 50°C for the products with the digital pressure switch
∗3 For the following conditions in accordance with [Test condition: ISO 8573-4:2001 compliant, Test method ISO 12500-3:2009 compliant]
Conditions: When a new element is used, and the flow capacity, inlet pressure, and the amount of solid bodies on the filter inlet side are stable
∗4 The compressed air purity class is indicated based on ISO 8573-1:2010 Compressed air – Part 1: Contaminants and purity classes.
For details on this standard, refer to page 110.
∗5 The compressed air quality class on the inlet side is [7 : 4 : 4].

Bowl Assembly/Part Nos.

Bowl material	Drain discharge mechanism	Drain port	Other	Model				
				AW20-D	**AW30-D**	**AW40-D**	**AW40-06-D**	**AW60-D**
Polycarbonate	Manual	With drain cock	—	C2SF-D	—	—		
			With bowl guard	C2SF-C-D	C3SF-D	C4SF-D		
		Drain cock with barb fitting	With bowl guard	—	C3SF-W-D	C4SF-W-D		
		With drain guide (without valve function)	—	C2SF□-J-D	—	—		
			With bowl guard	C2SF□-CJ-D	C3SF□-J-D	C4SF□-J-D		
	Automatic∗1 (Auto drain)	Normally closed (N.C.)	—	AD27-D	—	—		
			With bowl guard	AD27-C-D	AD37□-D	AD47□-D		
		Normally open (N.O.)	With bowl guard	—	AD38□-D	AD48□-D		
Nylon	Manual	With drain cock	—	C2SF-6-A	—	—		
			With bowl guard	C2SF-6C-A	C3SF-6-D	C4SF-6-D		
		Drain cock with barb fitting	With bowl guard	—	C3SF-6W-D	C4SF-6W-D		
		With drain guide (without valve function)	—	C2SF□-6J-A	—	—		
			With bowl guard	C2SF□-6CJ-A	C3SF□-6J-D	C4SF□-6J-D		
	Automatic∗1 (Auto drain)	Normally closed (N.C.)	—	AD27-6-A	—	—		
			With bowl guard	AD27-6C-A	AD37□-6-D	AD47□-6-D		
		Normally open (N.O.)	With bowl guard	—	AD38□-6-D	AD48□-6-D		
Metal	Manual	With drain cock	—	C2SF-2-A	C3SF-2-A	C4SF-2-A		
			With level gauge	—	C3LF-8-A	C4LF-8-A		
		With drain guide (without valve function)	—	C2SF□-2J-A	C3SF□-2J-A	C4SF□-2J-A		
			With level gauge	—	C3LF□-8J-A	C4LF□-8J-A		
	Automatic∗1 (Auto drain)	Normally closed (N.C.)	—	AD27-2-A	AD37□-2-A	AD47□-2-A		
			With level gauge	—	AD37□-8-A	AD47□-8-A		
		Normally open (N.O.)	—	—	AD38□-2-A	AD48□-2-A		
			With level gauge	—	AD38□-8-A	AD48□-8-A		

∗1 The bowl assembly comes with a bowl seal.
□ in bowl assembly part numbers indicates a pipe thread type (applicable tubing for auto drain).
No indication is necessary for Rc thread; however, indicate N for NPT thread, and F for G thread. (For auto drain, Nil: ø10, N: ø3/8")
Please contact SMC separately for psi and °F unit display specifications.

Option/Part Nos.

Optional specifications			Model				
			AW20(K)-D	**AW30(K)-D**	**AW40(K)-D**	**AW40(K)-06-D**	**AW60(K)-D**
Bracket assembly∗1			AW23P-270AS	AR33P-270AS	AR43P-270AS		AR54P-270AS
Set nut			AR23P-260S	AR33P-260S	AR43P-260S		—∗2
Pressure gauge∗3	**Round type**	**Standard**	G36-10-□01		G46-10-□01		
		0.02 to 0.2 MPa setting	G36-4-□01		G46-4-□01		
	Round type (with color zone)	**Standard**	G36-10-□01-L		G46-10-□01-L		
		0.02 to 0.2 MPa setting	G36-4-□01-L		G46-4-□01-L		
	Square embedded type∗4	**Standard**	GC3-10AS-D [136150A (Pressure gauge cover only)]				
		0.02 to 0.2 MPa setting	GC3-4AS-D [136150A (Pressure gauge cover only)]				
Digital pressure switch		**NPN output, Wiring bottom entry**	ISE35-N-25-MLA-X523 [ISE35-N-25-M (Switch body only)]∗5				
		NPN output, Wiring top entry	ISE35-R-25-MLA-X523 [ISE35-R-25-M (Switch body only)]∗5				
		PNP output, Wiring bottom entry	ISE35-N-65-MLA-X523 [ISE35-N-65-M (Switch body only)]∗5				
		PNP output, Wiring top entry	ISE35-R-65-MLA-X523 [ISE35-R-65-M (Switch body only)]∗5				

∗1 The assembly consists of a bracket and set nuts.
∗2 For the AW60(K)-D, the assembly consists of a bracket A/B and 2 mounting screws. Please contact SMC regarding the set nuts for the AW60(K)-D.
∗3 □ in part numbers for a round type pressure gauge indicates a pipe thread type. No indication is necessary for R; however, indicate N for NPT. Please contact SMC regarding the pressure gauge supply for both MPa and psi unit specifications.
∗4 Including one O-ring and 2 mounting screws. [ ]: Pressure gauge cover only
∗5 In addition to the pressure switch body, lead wire with connector (2 m), adapter, lock pin, O-ring (1 pc.), mounting screws (2 pcs.) are attached.
[ ]: Switch body only (Regarding how to order the digital pressure switch, refer to the **Web Catalog**.)

AW20(K)-D to AW40(K)-06-D

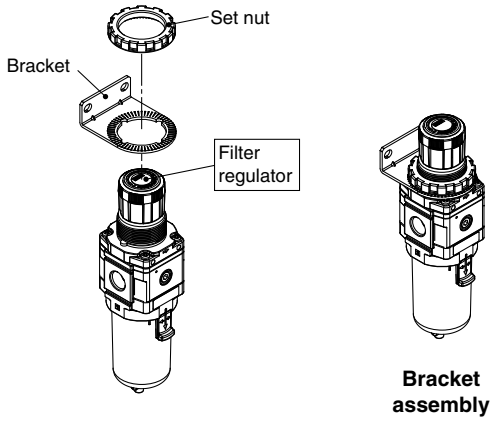

AW60(K)-D

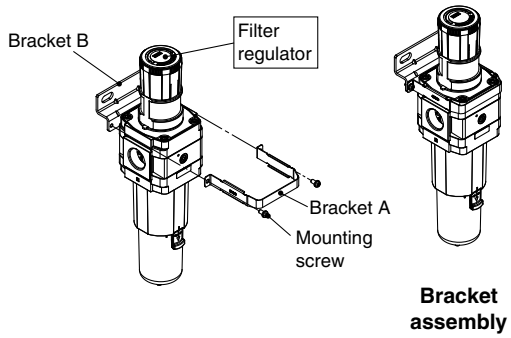

Replacement Parts

Description		Part no.				
		AW20(K)-D	**AW30(K)-D**	**AW40(K)-D**	**AW40(K)-06-D**	**AW60(K)-D**
Valve assembly		AW24P-060AS	AW34P-060AS	AW44P-060AS	AW49P-060AS	AW64P-060AS
Filter element		AF20P-060S	AF30P-060S	AF40P-060S		AW60P-060S
Baffle		AF24P-040S	AF34P-040S	AF44P-040S		AW64P-030S
Diaphragm assembly	**Relieving type**	AR24P-150AS	AR34P-150AS	AR44P-150AS		AR54P-150AS
	Non-relieving type	AR24P-150AS-N	AR34P-150AS-N	AR44P-150AS-N		AR54P-150AS-N
Bowl seal		C2SFP-260S	C32FP-260S	C42FP-260S		
Bowl assembly∗1, ∗2		Refer to “Bowl Assembly/Part Nos.”				
Check valve assembly∗3		AR24KP-020AS				

∗1 The bowl assembly comes with a bowl seal.
∗2 Please contact SMC separately for psi and °F unit display specifications.
∗3 The check valve assembly is applicable for a filter regulator with backflow function (AW20K-D to AW60K-D) only. The assembly consists of a check valve cover, check valve body assembly, and 2 mounting screws.

Flow Rate Characteristics (Representative values)

——— Inlet pressure: 1.0 MPa
- - - Inlet pressure: 0.7 MPa

AW20(K)-D

Rc1/4

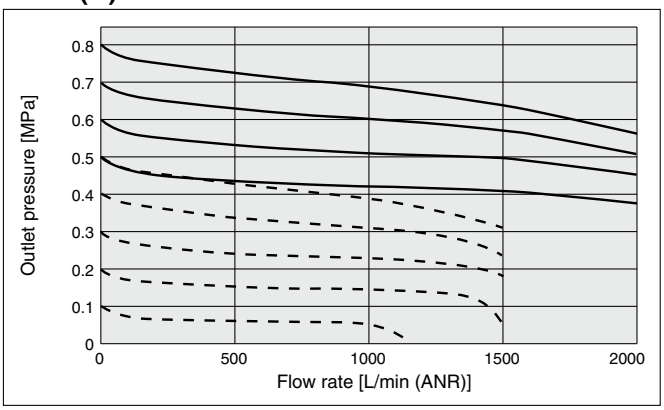

AW30(K)-D

Rc3/8

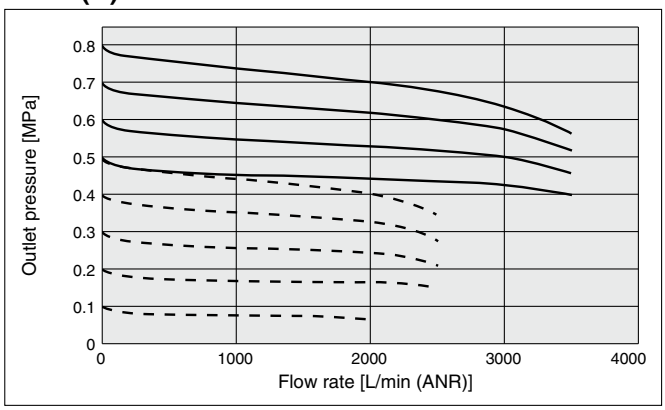

AW40(K)-D

Rc1/2

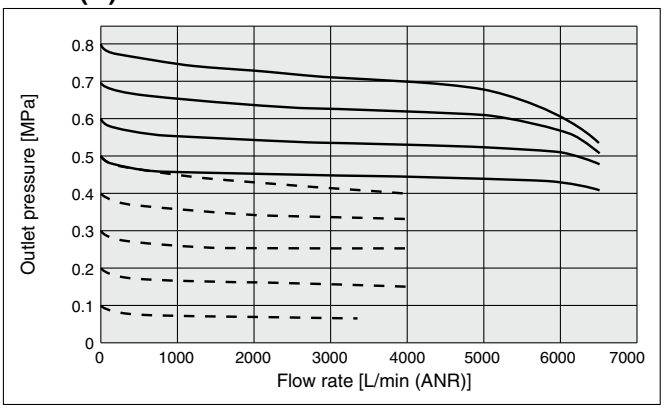

AW40(K)-06-D

Rc3/4

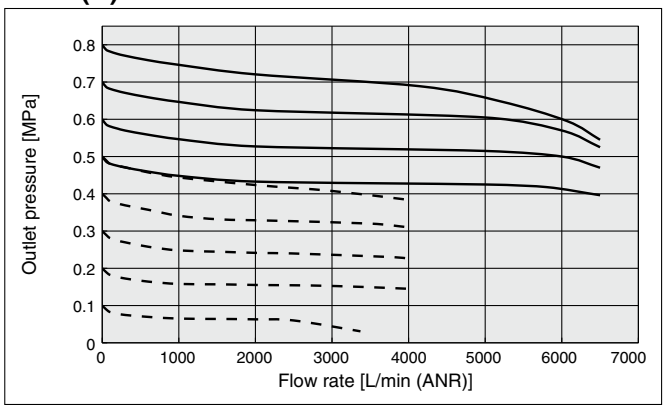

AW60(K)-D

Rc1

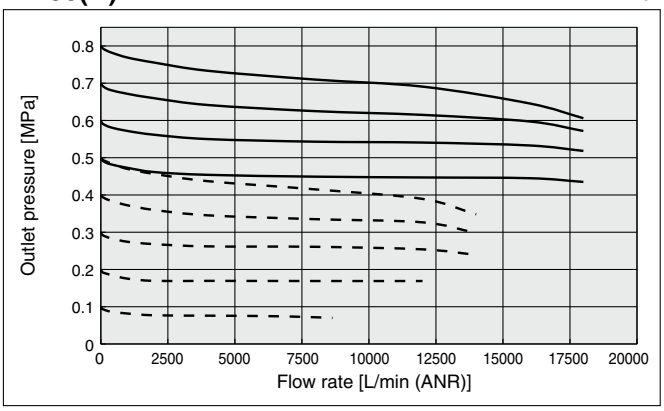

Pressure Characteristics (Representative values)

Conditions: Inlet pressure of 0.7 MPa, Outlet pressure of 0.2 MPa, Flow rate 20 L/min (ANR)

AW20(K)-D

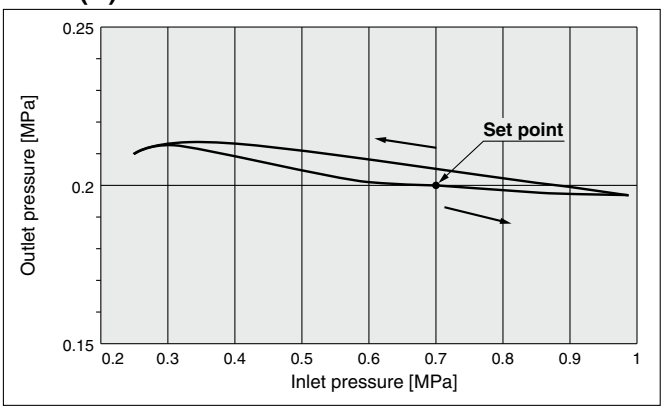

AW30(K)-D

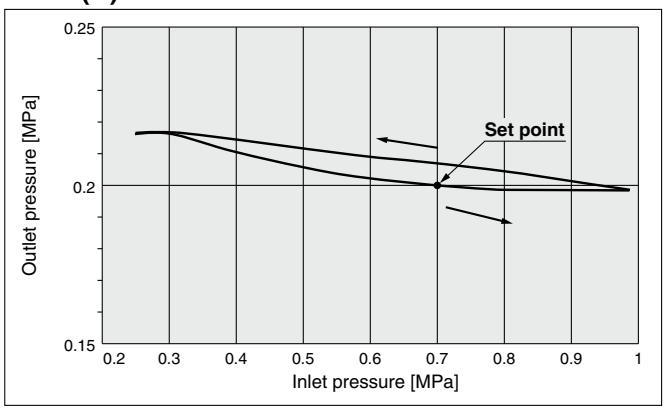

AW40(K)-D

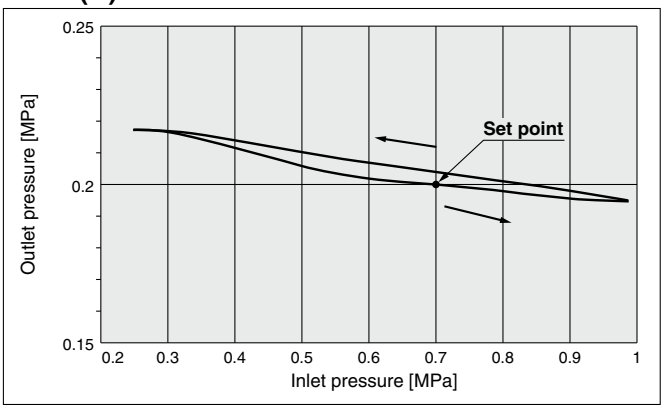

AW40(K)-06-D

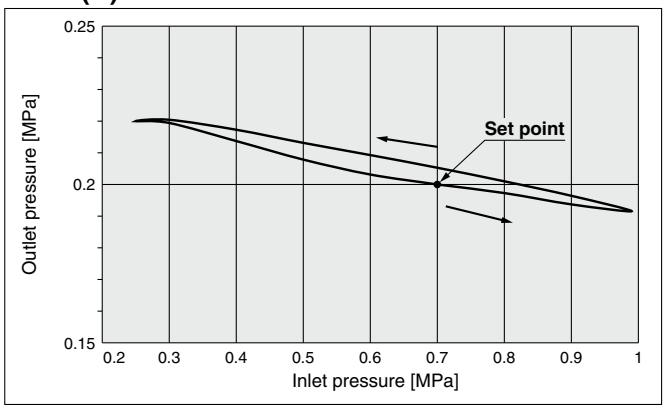

AW60(K)-D

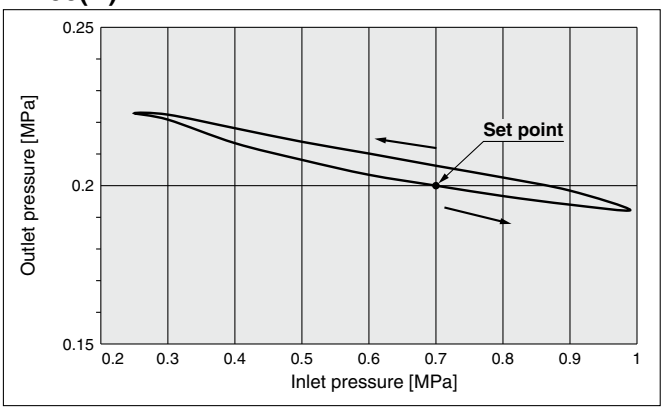

Dimensions

Standard (Round Type Pressure Gauge)

AW20-D

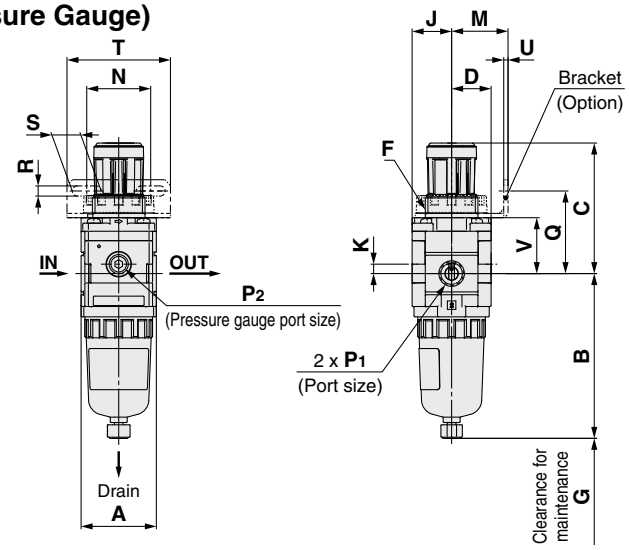

Panel cutout dimensions

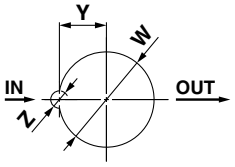

Plate thickness
AW20-D to AW30-D : Max. 3.5
AW40-D to AW40-06-D: Max. 5

AW30-D to AW40-06-D

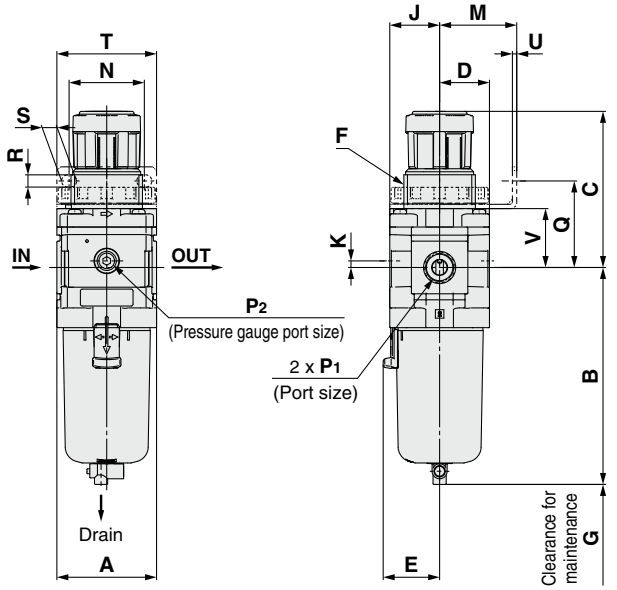

AW60-D

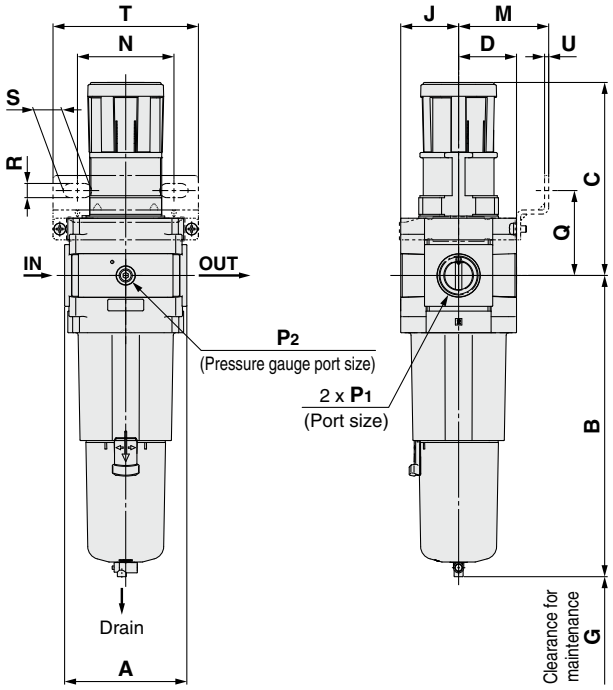

Round type pressure gauge

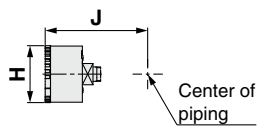

Applicable model	Optional specifications	Semi-standard					
	With auto drain	PC/PA bowl		Metal bowl		Metal bowl with level gauge	
		Drain cock with barb fitting	With drain guide	With drain cock	With drain guide	With drain cock	With drain guide
AW20-D	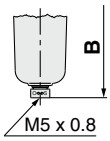		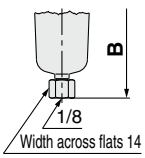	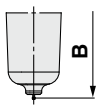	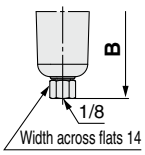		
AW30-D to AW60-D	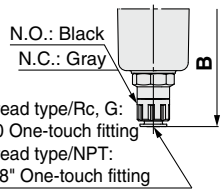	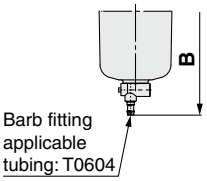	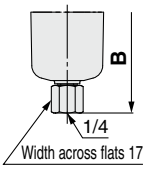	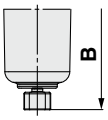	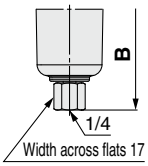	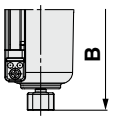	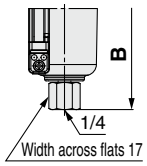

Model	Standard specifications											Optional specifications					
												Round type pressure gauge		Round type pressure gauge (Semi-standard: Z)		Round type pressure gauge (with color zone)	
	P_1	P_2	A	B	C*1	D	E	F	G	J	K	H	J	H	J	H	J
AW20-D	1/8, 1/4	1/8	40	87.6	71.8	21	—	M28 x 1	40	21	5	ø37.5	57.5	ø37.5	58.5	ø37.5	58.5
AW30-D	1/4, 3/8	1/8	53	115.3	86.5	26.5	30	M38 x 1.5	55	26.5	3.5	ø37.5	63	ø37.5	64	ø37.5	64
AW40-D	1/4, 3/8, 1/2	1/8	70	147.1	91.5	35.5	38.4	M42 x 1.5	80	35.5	—	ø42.5	73	ø42.5	73	ø42.5	73
AW40-06-D	3/4	1/8	75	149.1	93	35.5	38.4	M42 x 1.5	80	35.5	—	ø42.5	73	ø42.5	73	ø42.5	73
AW60-D	3/4, 1	1/8	95	234.1	155	45	—	—	30	45	—	ø42.5	82.5	ø42.5	82.5	ø42.5	82.5

Model	Optional specifications												Semi-standard					
	Bracket mount							Panel mount				With auto drain	PC/PA bowl		Metal bowl		Metal bowl with level gauge	
													With barb fitting	With drain guide	With drain cock	With drain guide	With drain cock	With drain guide
	M	N	Q	R	S	T	U	V	W	Y	Z	B	B	B	B	B	B	B
AW20-D	30	34	43.9	5.4	15.4	55	2.3	29.7	28.5	14	6	104.9	—	91.4	87.4	93.9	—	—
AW30-D	41	40	46	6.5	8	53	2.3	31.3	38.5	19	7	157	123.9	122.2	117.8	122.3	137.8	142.3
AW40-D	50	54	54	8.5	10.5	70	2.3	35.5	42.5	21	7	186.9	155.6	153.9	149.5	154	169.5	174
AW40-06-D	50	54	55.5	8.5	10.5	70	2.3	37	42.5	21	7	188.9	157.6	155.9	151.5	156	171.5	176
AW60-D	70	75	66	11	22	113	3.2	—	—	—	—	273.9	242.6	240.9	236.5	241	256.5	261

*1 The dimension of C is the length when the filter regulator knob is unlocked.

Dimensions

Standard (Square Embedded Type Pressure Gauge, Digital Pressure Switch)

AW20-□□□E/E1/E2/E3/E4-D

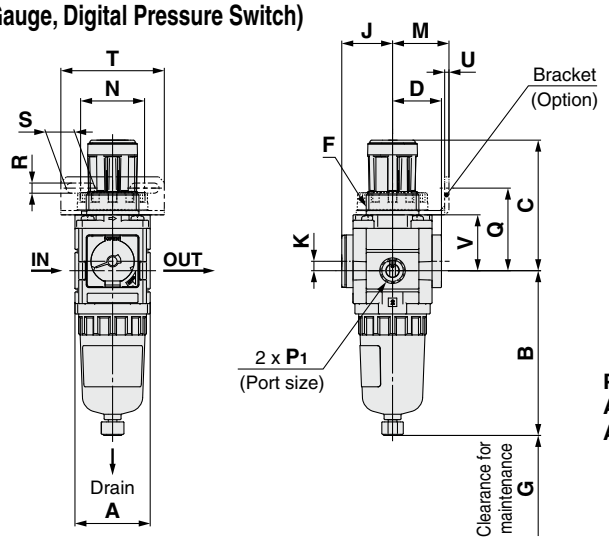

Panel cutout dimensions

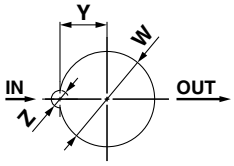

Plate thickness
AW20-D to AW30-D : Max. 3.5
AW40-D to AW40-06-D: Max. 5

AW30-□□□E/E1/E2/E3/E4-D to AW40-□□□E/E1/E2/E3/E4-D

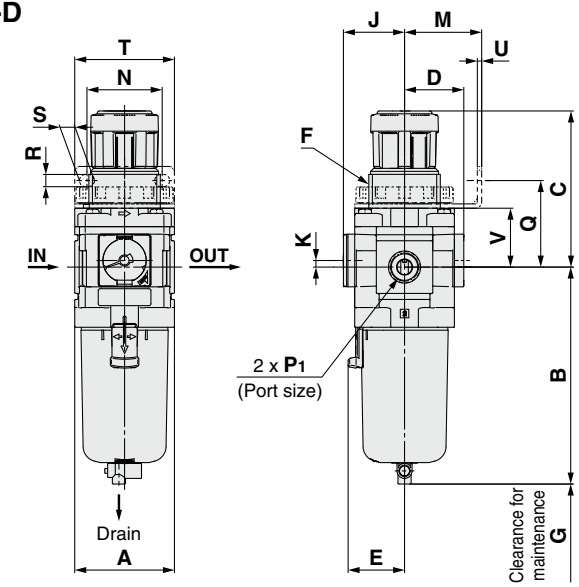

AW60-□□□E/E1/E2/E3/E4-D

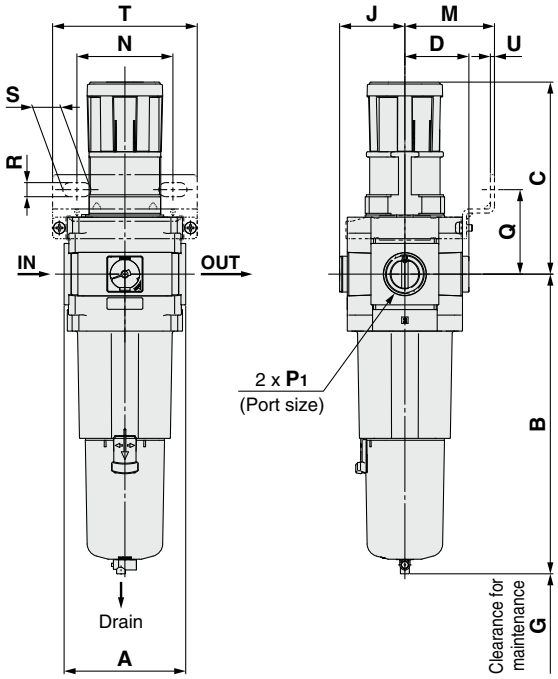

Square embedded type pressure gauge	Digital pressure switch
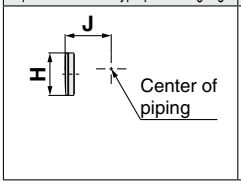	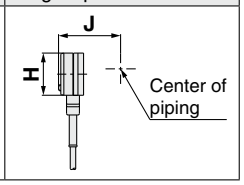

Applicable model	Optional specifications	Semi-standard					
	With auto drain	PC/PA bowl		Metal bowl		Metal bowl with level gauge	
		Drain cock with barb fitting	With drain guide	With drain cock	With drain guide	With drain cock	With drain guide
AW20-D	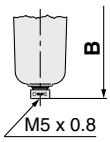		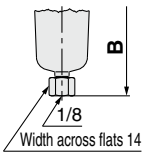	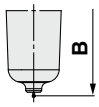	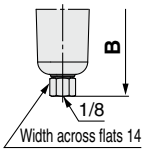		
AW30-D to AW60-D	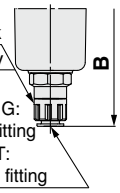	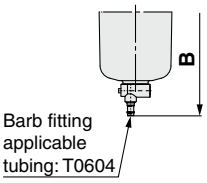	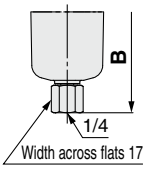	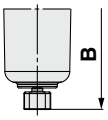	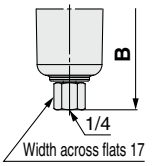	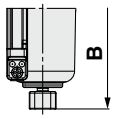	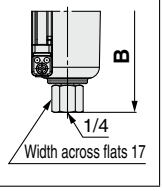

Model	Standard specifications									Optional specifications			
										Square embedded type pressure gauge		Digital pressure switch	
	P_1	A	B	C*1	D	E	F	G	K	H	J	H	J
AW20-D	1/8, 1/4	40	87.6	71.8	26	—	M28 x 1	40	5	□28	27	□27.8	37.5
AW30-D	1/4, 3/8	53	115.3	86.5	31.5	30	M38 x 1.5	55	3.5	□28	32.5	□27.8	43
AW40-D	1/4, 3/8, 1/2	70	147.1	91.5	40.5	38.4	M42 x 1.5	80	—	□28	41.5	□27.8	52
AW40-06-D	3/4	75	149.1	93	40.5	38.4	M42 x 1.5	80	—	□28	41.5	□27.8	52
AW60-D	3/4, 1	95	234.1	155	50	—	—	30	—	□28	51	□27.8	61.5

Model	Optional specifications												Semi-standard					
	Bracket mount							Panel mount				With auto drain	PC/PA bowl		Metal bowl		Metal bowl with level gauge	
													With barb fitting	With drain guide	With drain cock	With drain guide	With drain cock	With drain guide
	M	N	Q	R	S	T	U	V	W	Y	Z	B	B	B	B	B	B	B
AW20-D	30	34	43.9	5.4	15.4	55	2.3	29.7	28.5	14	6	104.9	—	91.4	87.4	93.9	—	—
AW30-D	41	40	46	6.5	8	53	2.3	31.3	38.5	19	7	157	123.9	122.2	117.8	122.3	137.8	142.3
AW40-D	50	54	54	8.5	10.5	70	2.3	35.5	42.5	21	7	186.9	155.6	153.9	149.5	154	169.5	174
AW40-06-D	50	54	55.5	8.5	10.5	70	2.3	37	42.5	21	7	188.9	157.6	155.9	151.5	156	171.5	176
AW60-D	70	75	66	11	22	113	3.2	—	—	—	—	273.9	242.6	240.9	236.5	241	256.5	261

*1 The dimension of C is the length when the filter regulator knob is unlocked.

Dimensions

With Backflow Function (Round Type Pressure Gauge, Square Embedded Type Pressure Gauge, Digital Pressure Switch)
AW20K-D

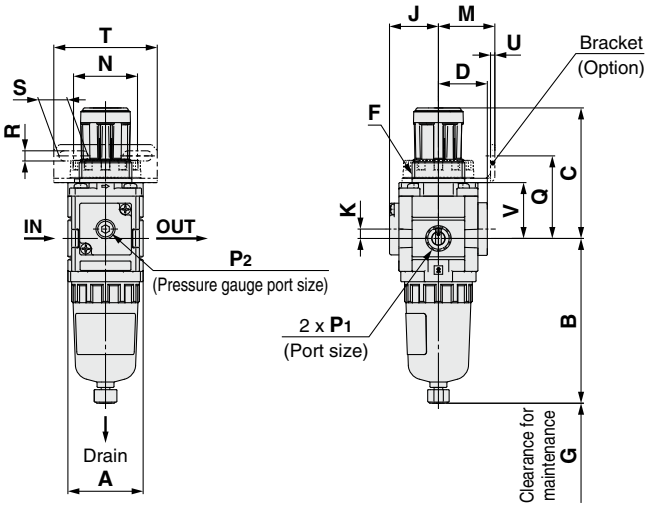

Panel cutout dimensions

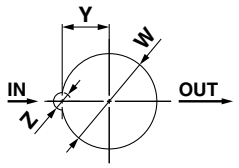

Plate thickness
AW20K-D to AW30K-D : Max. 3.5
AW40K-D to AW40K-06-D: Max. 5

AW30K-D to AW40K-06-D

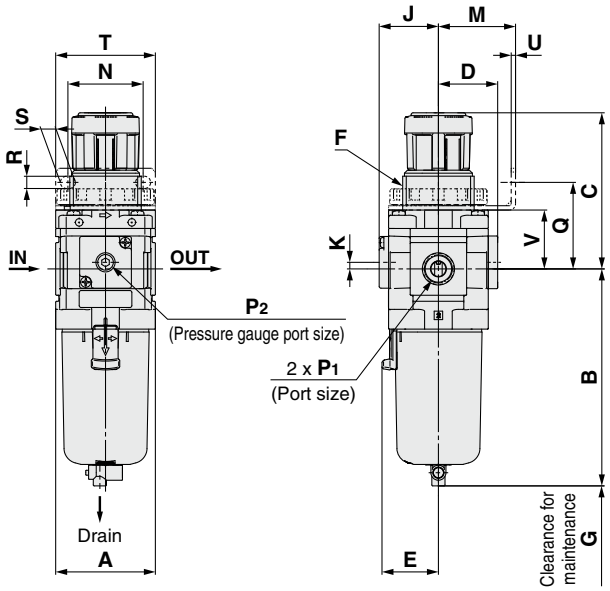

AW60K-D

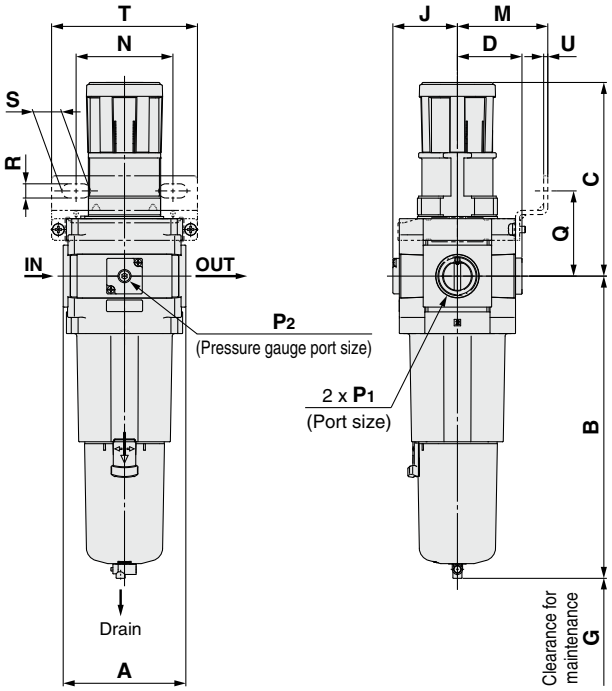

Round type pressure gauge	Square embedded type pressure gauge	Digital pressure switch
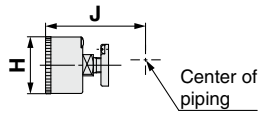	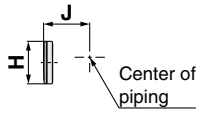	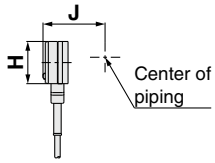

Applicable model	Optional specifications	Semi-standard					
	With auto drain	PC/PA bowl		Metal bowl		Metal bowl with level gauge	
		Drain cock with barb fitting	With drain guide	With drain cock	With drain guide	With drain cock	With drain guide
AW20K-D	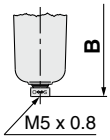		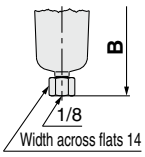	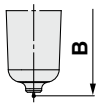	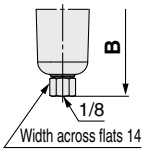		
AW30K-D to AW60K-D	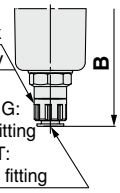	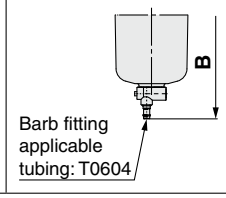	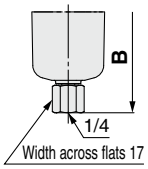	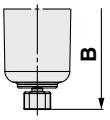	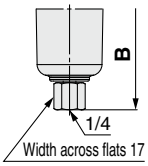	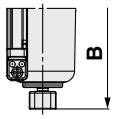	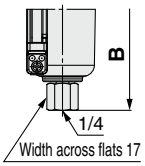

Model	Standard specifications											Optional specifications							
												Square embedded type pressure gauge		Digital pressure switch		Round type pressure gauge		Round type pressure gauge (Semi-standard: Z)	
	P_1	P_2	A	B	C*1	D	E	F	G	J	K	H	J	H	J	H	J	H	J
AW20K-D	1/8, 1/4	1/8	40	87.6	71.8	26	—	M28 x 1	40	26	5	□28	27	□27.8	37.5	ø37.5	62.5	ø37.5	63.5
AW30K-D	1/4, 3/8	1/8	53	115.3	86.5	31.5	30	M38 x 1.5	55	31.5	3.5	□28	32.5	□27.8	43	ø37.5	68	ø37.5	69
AW40K-D	1/4, 3/8, 1/2	1/8	70	147.1	91.5	40.5	38.4	M42 x 1.5	80	40.5	—	□28	41.5	□27.8	52	ø42.5	78	ø42.5	78
AW40K-06-D	3/4	1/8	75	149.1	93	40.5	38.4	M42 x 1.5	80	40.5	—	□28	41.5	□27.8	52	ø42.5	78	ø42.5	78
AW60K-D	3/4, 1	1/8	95	234.1	155	50	—	—	30	50	—	□28	51	□27.8	61.5	ø42.5	87.5	ø42.5	87.5

Model	Optional specifications														Semi-standard					
	Round type pressure gauge (with color zone)		Bracket mount							Panel mount				With auto drain	PC/PA bowl		Metal bowl		Metal bowl with level gauge	
															With barb fitting	With drain guide	With drain cock	With drain guide	With drain cock	With drain guide
	H	J	M	N	Q	R	S	T	U	V	W	Y	Z	B	B	B	B	B	B	B
AW20K-D	ø37.5	63.5	30	34	43.9	5.4	15.4	55	2.3	29.7	28.5	14	6	104.9	—	91.4	87.4	93.9	—	—
AW30K-D	ø37.5	69	41	40	46	6.5	8	53	2.3	31.3	38.5	19	7	157	123.9	122.2	117.8	122.3	137.8	142.3
AW40K-D	ø42.5	78	50	54	54	8.5	10.5	70	2.3	35.5	42.5	21	7	186.9	155.6	153.9	149.5	154	169.5	174
AW40K-06-D	ø42.5	78	50	54	55.5	8.5	10.5	70	2.3	37	42.5	21	7	188.9	157.6	155.9	151.5	156	171.5	176
AW60K-D	ø42.5	87.5	70	75	66	11	22	113	3.2	—	—	—	—	273.9	242.6	240.9	236.5	241	256.5	261

*1 The dimension of C is the length when the filter regulator knob is unlocked.

Filter Regulator/*AW20-D* to *AW60-D*
Filter Regulator with Backflow Function/*AW20K-D* to *AW60K-D*
Made to Order

Please contact SMC for detailed dimensions, specifications, and lead times.

Made to Order

① 0.4 MPa Setting

The setting specification is 0.4 MPa.

When a pressure gauge is included, the display will show a range from 0 to 0.7 MPa.

Specifications

Made-to-order part no.	-X406
Proof pressure [MPa]	1.5
Max. operating pressure [MPa]	1.0
Set pressure range [MPa]∗1	0.05 to 0.4

∗1 Pressure can be set higher than the specification pressure in some cases, but use pressure within the specification range.

Applicable Models

Model	AW20(K)-D	AW30(K)-D	AW40(K)-D	AW40(K)-06-D	AW60(K)-D
Port size	1/8, 1/4	1/4, 3/8	1/4, 3/8, 1/2	3/4	3/4, 1

② Long Bowl

Drain capacity is greater than that of standard models.

Applicable Models/Drain Capacity

Model	AW20(K)-D	AW30(K)-D	AW40(K)-D	AW40(K)-06-D	AW60(K)-D
Port size	1/8, 1/4	1/4, 3/8	1/4, 3/8, 1/2	3/4	3/4, 1
Drain capacity [cm³]	19	43	88		
B dimension [mm]∗1	108.1	137.3	167.2	169.2	254.2

∗1 For polycarbonate bowls. Please contact SMC for other bowl materials.

AW20-D **AW30 to 60-D**

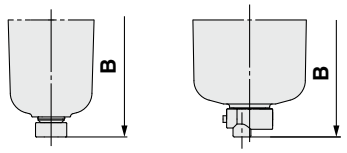

How to Order

AW 30 ❶ ❷ – ❸ 03 ❹ ❺ – ❻ – D – X406

X406	0.4 MPa setting
X64	Long bowl

· Option/Semi-standard: Select one each for **a** to **h**.
· Option/Semi-standard symbol: When more than one specification is required, indicate in alphanumeric order.
Example) AW30K-03BE-2N-D-X406

			Symbol	Description	0.4 MPa Setting ❶ Body size 20	30	40	60	Long Bowl ❶ Body size 20	30	40	60
❷	With backflow function		**Nil**	Without backflow function	●	●	●	●	●	●	●	●
			K∗1	With backflow function	●	●	●	●	●	●	●	●
			+									
❸	Pipe thread type		**Nil**	Rc	●	●	●	●	●	●	●	●
			N	NPT	●	●	●	●	●	●	●	●
			F	G	●	●	●	●	●	●	●	●
			+									
❹	Port size		**01**	1/8	●	—	—	—	●	—	—	—
			02	1/4	●	●	●	—	●	●	●	—
			03	3/8	—	●	●	—	—	●	●	—
			04	1/2	—	—	●	—	—	—	●	—
			06	3/4	—	—	●	●	—	—	●	●
			10	1	—	—	—	●	—	—	—	●
			+									
❺	Option∗2	**a** Mounting	**Nil**	Without mounting option	●	●	●	●	●	●	●	●
			B∗3	With bracket	●	●	●	●	●	●	●	●
			H	With set nut (for panel mount)	●	●	●	—	●	●	●	—
			+									
		b Float type auto drain∗4	**Nil**	Without auto drain	●	●	●	●	—	—	—	—
			C∗5	Float type auto drain (N.C.): Drain port is closed when pressure is not applied.	●	●	●	●	—	—	—	—
			D∗6	Float type auto drain (N.O.): Drain port is open when pressure is not applied.	—	●	●	●	—	—	—	—
			+									
		c Pressure gauge∗7	**Nil**	Without pressure gauge	●	●	●	●	●	●	●	●
			E	Square embedded type pressure gauge (with limit indicator)	●	●	●	●	●	●	●	●
			G	Round type pressure gauge (with limit indicator)	●	●	●	●	●	●	●	●
			M	Round type pressure gauge (with color zone)	●	●	●	●	●	●	●	●
		c Digital pressure switch∗8	**E1**	Output: NPN output, Electrical entry: Wiring bottom entry	●	●	●	●	●	●	●	●
			E2	Output: NPN output, Electrical entry: Wiring top entry	●	●	●	●	●	●	●	●
			E3	Output: PNP output, Electrical entry: Wiring bottom entry	●	●	●	●	●	●	●	●
			E4	Output: PNP output, Electrical entry: Wiring top entry	●	●	●	●	●	●	●	●

∗1 Set the inlet pressure to at least 0.05 MPa higher than the set pressure.
∗2 Options B, G, H, and M are not assembled and supplied loose at the time of shipment.
∗3 The assembly consists of a bracket and set nuts (applicable to the AW20(K)-D to AW40(K)-D). The AR60(K)-D assembly includes 2 types of brackets and 2 mounting screws.
∗4 The auto drain port is ø10 One-touch fitting (❸ Pipe thread type: Rc, G) or ø3/8" One-touch fitting (❸ Pipe thread type: NPT)
∗5 When pressure is not applied, condensate which does not start the auto drain mechanism will be left in the bowl. Releasing the residual condensate before ending operations for the day is recommended.
∗6 If the compressor is small (0.75 kW, discharge flow is less than 100 L/min (ANR)), air leakage from the drain cock may occur during the start of operations. N.C. type is recommended.
∗7 When the pressure gauge is attached, a 1.0 MPa pressure gauge will be fitted for standard (0.85 MPa) type. 0.4 MPa pressure gauge for 0.2 MPa type. 0.7 MPa pressure gauge for 0.4 MPa type (-X406).
∗8 When choosing with H (panel mount), the installation space for lead wires will not be secured. In this case, select "wiring bottom entry" for the electrical entry.

			Symbol	Description	0.4 MPa Setting				Long Bowl			
					❶ Body size				❶ Body size			
					20	30	40	60	20	30	40	60
❻	Semi-standard	d Set pressure∗9	Nil	0.05 to 0.85 MPa setting	—	—	—	—	●	●	●	●
			1	0.02 to 0.2 MPa setting	—	—	—	—	●	●	●	●
		+										
		e Bowl∗10	Nil	Polycarbonate bowl	●	●	●	●	●	●	●	●
			2	Metal bowl	●	●	●	●	●	●	●	●
			6	Nylon bowl	●	●	●	●	●	●	●	●
			8	Metal bowl with level gauge	—	●	●	●	—	—	—	—
			C	With bowl guard	●	—∗11	—∗11	—∗11	●	—∗11	—∗11	—∗11
			6C	With bowl guard (Nylon bowl)	●	—∗12	—∗12	—∗12	●	—∗12	—∗12	—∗12
		+										
		f Drain port∗13	Nil	With drain cock	●	●	●	●	●	●	●	●
			J∗14	Drain guide 1/8	●	—	—	—	●	—	—	—
				Drain guide 1/4	—	●	●	●	—	●	●	●
			W∗15	Drain cock with barb fitting	—	●	●	●	—	●	●	●
		+										
		g Exhaust mechanism	Nil	Relieving type	●	●	●	●	●	●	●	●
			N	Non-relieving type	●	●	●	●	●	●	●	●
		+										
		h Flow direction	Nil	Flow direction: Left to right	●	●	●	●	●	●	●	●
			R	Flow direction: Right to left	●	●	●	●	●	●	●	●
		+										
		i Unit	Nil	Unit on product label: MPa, °C, Pressure gauge in SI units: MPa	●	●	●	●	●	●	●	●
			Z∗16	Unit on product label: psi, °F, Pressure gauge: MPa/psi dual scale	○∗18	○∗18	○∗18	○∗18	○∗18	○∗18	○∗18	○∗18
			ZA∗17	Digital pressure switch: With unit selection function	△∗19	△∗19	△∗19	△∗19	△∗19	△∗19	△∗19	△∗19

∗9 Pressure can be set higher than the specification pressure in some cases, but use pressure within the specification range.
∗10 Refer to chemical data on page 109 for chemical resistance of the bowl.
∗11 A bowl guard is provided as standard equipment (polycarbonate).
∗12 A bowl guard is provided as standard equipment (nylon).
∗13 The combination of float type auto drain C and D is not available.
∗14 Without a valve function. The mounting screws are the same as the thread of ❸.
∗15 The combination of metal bowl 2 and 8 is not available.
∗16 For the pipe thread type: NPT
This product is for overseas use only according to the New Measurement Act. (The SI unit type is provided for use in Japan.) Cannot be used with M: Round type pressure gauge (with color zone). Available by request for special. The digital pressure switch will be equipped with the unit selection function, setting to psi initially.
∗17 For options: E1, E2, E3, E4
This product is for overseas use only according to the New Measurement Act. (The SI unit type is provided for use in Japan.)
∗18 ○: For the pipe thread type: NPT only
∗19 △: Select with options: E1, E2, E3, E4.

Filter Regulator/*AW20-D to AW60-D*
Filter Regulator with Backflow Function/*AW20K-D to AW60K-D*
Made to Order

Please contact SMC for detailed dimensions, specifications, and lead times.

Made to Order

Without backflow function | With backflow function

③ Clean Series

For details, refer to the Clean Series/Low Particle Generation section of the **Web Catalog**.

10 - Standard model no.

- **Clean Series**

④ Copper, Fluorine and Silicone-free + Low Particle Generation

For details, refer to the Clean Series/Low Particle Generation section of the **Web Catalog**.

21 - Standard model no.

- **Copper, Fluorine and Silicone-free + Low Particle Generation**

AR-D/AW-D Series
Option

Knob Cover

Can be mounted on the knob of a regulator or filter regulator in order to prevent the accidental operation of the knob

AR 34 P – 580AS

Size

24
34
44
54

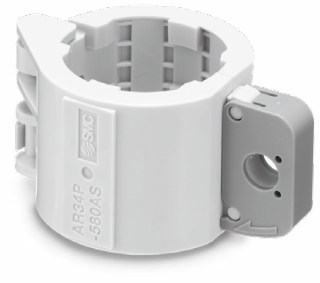

Standard Specifications

Ambient temperature	–5 to 60°C

Dimensions

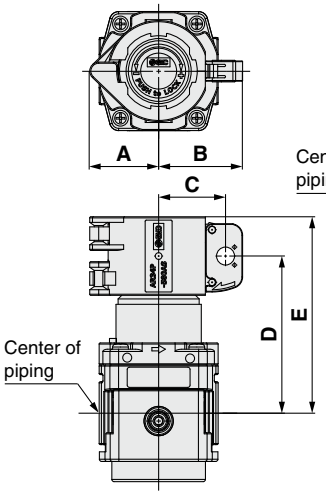

AR-D Series

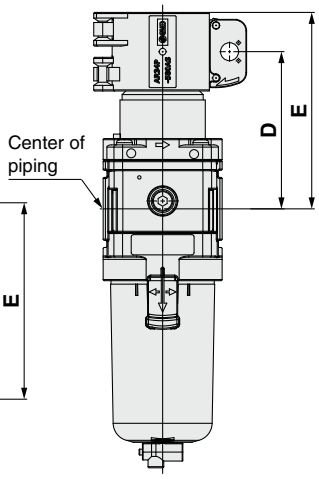

AW-D Series

Part no.	A	B	C	D	E	Applicable model
AR24P-580AS	23.5	32.1	24.5	53.1	69.1	**AR20-D**
				58.1	74.1	**AW20-D**
AR34P-580AS	30.7	37.4	29.8	70	87.5	**AR30-D, AW30-D**
AR44P-580AS	32.8	39.4	31.8	74.5	97	**AR40-D, AW40-D**
				76	98.5	**AR40-06-D, AW40-06-D**
AR54P-580AS	42	48.9	41.3	99.6	133.6	**AR50-D**
				129.6	163.6	**AR60-D, AW60-D**

Detailed dimensions of the lock hole

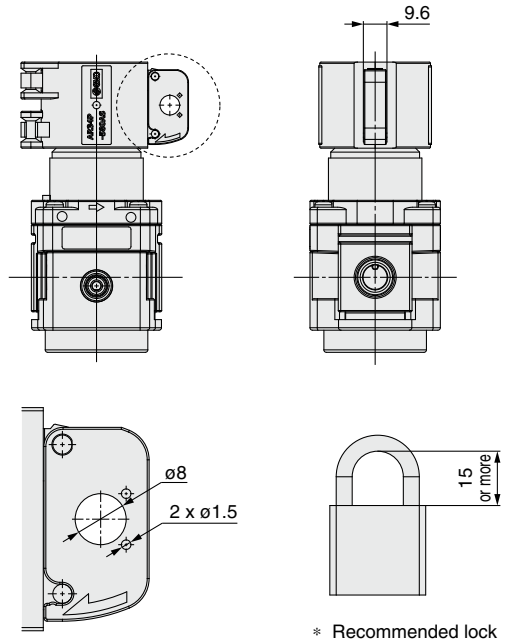

∗ Recommended lock dimensions

Mounting Precautions

Before mounting the knob cover, confirm that the knob is in the locked state (in which the orange line is not visible).
Mount the cover in accordance with the mounting instructions below.

1 Mount the knob cover on the knob.

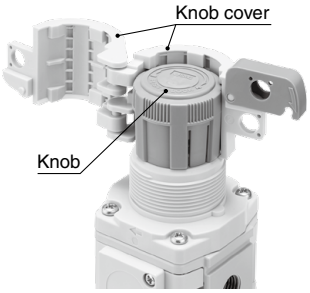

2 Close the lock cover.

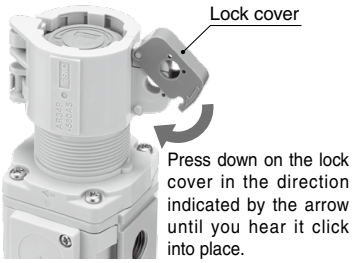

3 Secure with a lock (provided by the customer).
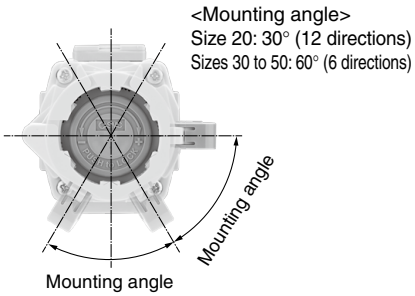
The knob cover can be mounted facing each mounting angle in relation to the knob.